User and maintenance manual for generating sets

Translation of the original instructions

R16CC

33504027301NE_2_1

EN

CONTENTS

1. Preface 4
1.1. General recommendations 4
1.2. Warnings 4
1.3. Pictograms and their meanings 5
1.4. Safety instructions 8
1.4.1 General guidelines 8
1.4.2 Electrical safety precautions 10
1.4.3 Safety precautions in case of electrical shock 11
1.4.4 Safety precautions relating to fire, burns and explosions 11
1.4.5 Toxic risk safety precautions 13
1.4.6 Precautions for risks relating to handling phases 14
1.4.7 Precautions for risks relating to noise 14
2. General description 15
2.1. Description 15
2.2. Technical specifications 18
2.3. Identifying sets 20
2.4. Fluid retention 21
2.5. Fuels, lubricants and coolants 22
2.5.1 Fuel specifications 22
2.5.2 Lubricant specifications 24
2.5.3 Coolant specifications 25
3. Transporting the equipment 27
3.1. Warnings concerning transport 27
3.2. Preparing for transport 27
3.3. Road transport 27
3.3.1 Generating sets with and without an enclosure 27
3.3.2 Generating sets on trailers 28
3.3.2.1. Hitching and unhitching the trailer 28
3.3.2.2. Check before towing 32
3.3.2.3. Operation 32
3.4. Rail transport 33
3.4.1 Generating sets with and without an enclosure 33
3.5. Shipping 34
3.5.1 Generating sets with and without an enclosure 34
3.6. Air transport 34
4. Installation - Connections 35
4.1. Unloading the generating set 35
4.1.1 Choosing the location 35
4.1.2 Safety during unloading 36
4.1.3 Unloading the generating set 36
4.1.3.1. Slings 36
4.1.3.2. Fork lift truck 37
4.1.4 Moving the generating set 37
4.2. Connecting the generating set 38
4.2.1 Connection summary 38
4.2.2 Protecting people and equipment 39
4.2.2.1. Earthing system principle 39
4.2.2.2. TT system 39
4.2.2.3. Installing the differential protection 40
4.2.2.4. Setting the generating set differential protection 41
4.2.2.5. Earthing the generating set 43
4.2.3 Making the connections 44
4.2.3.1. Connections - general information 44
4.2.3.2. Selecting the power cables 45
4.2.3.3. Connecting the generating set to the installation 46
4.2.3.4. Connecting the battery or batteries to the generating set 48
4.2.4 Overvoltage 48
5. Installation 48
5.1. Warnings concerning commissioning 48
5.2. Checking the generating set installation 48
5.3. Preparing for operation of the generating set 49
5.4. Checking the generating set before startup 49
5.5. Checking the generating set after startup 49

6. Using the generator set 50
6.1. Pre-Start Inspection 50
6.2. Generator set with NEXYS control panel 53
6.2.1 Control panel presentation 53
6.2.1.1. Introduction to pictograms 54
6.2.2 Manual starting 55
6.2.3 Switching off 56
6.2.4 Alarms and faults 56
6.2.5 Faults and alarms - Details 56
6.2.6 MURPHY diagnostic module 58
6.3. Generator set with TELYS control panel 64
6.3.1 Control panel presentation 64
6.3.1.1. View of the front panel 64
6.3.1.2. Description of the screen 66
6.3.1.3. Description of the pictograms in zone 1 67
6.3.1.4. Description of the pictograms in zone 2 68
6.3.1.5. Description of the pictograms in zone 3 69
6.3.1.6. Display of messages in zone 4 71
6.3.2 Starting 76
6.3.3 Switching off 77
6.3.4 Alarms and faults 77
6.3.4.1. Viewing alarms and faults 77
6.3.4.2. Activation of an alarm or fault 78
6.3.4.3. Activation of an alarm and a fault 79
6.3.4.4. Engine fault codes display 80
6.3.4.5. Horn reset 81
7. Maintenance schedule 81
7.1. Reminder of use 81
7.2. Maintenance safety instructions 81
7.3. Table of maintenance operations 82
7.4. Cover maintenance 83
7.5. Trailer maintenance 83
7.6. Fault finding 84
7.7. No load and under load tests 84
8. Starter batteries 85
8.1. Checking the electrolyte level 85
8.2. Checking the voltage/acid density 85
8.3. Charging the battery 86
8.4. Cleaning the battery 86
8.5. Fault finding 87
9. Options 88
9.1. dual frequency 88
9.2. Neutral system 91
9.3. Fuel supply valve 91
10. Appendix 93
10.1. Appendix A – Engine user and maintenance manual 93
10.2. Appendix B - Alternator user and maintenance manual 191

TABLE OF ILLUSTRATIONS

Figure 1 : Warning pictograms 5
Figure 2 : Pictograms indicating prohibited activities 5
Figure 3 : Pictograms indicating compulsory operations 6
Figure 4 : Information pictograms 6
Figure 5 : Specific pictograms 7
Figure 6 : Pictograms relating to battery operations 7
Figure 7 : General description of the generating set 15
Figure 8 : General description of the generating set 16
Figure 9 : General description of the generating set 17
Figure 10 : Example of a generating set identification plate 20
Figure 11 : Fluid retention container 21
Figure 12 : Example of French signalling 33
Figure 13 : Examples of problems that may be encountered 35
Figure 14 : Points used for lifting and moving 37
Figure 15 : TT earthing system 39
Figure 16 : View of the front side 53
Figure 17 : Description of the LEDs 54
Figure 18 : View of pictograms 54
Figure 19 : View of the front panel 64
Figure 20 : Description of the LEDs 65
Figure 21 : Close-up of USB ports 65
Figure 22 : Description of the screen (example) 66
Figure 23 : Trailer lubrication/greasing points 83

1. Preface

1.1. General recommendations

The information contained in this manual is taken from technical data available at the time of print. In line with our policy of continually improving the quality of our products, this information may be amended without warning.

Read the safety instructions attentively in order to prevent any accident, incident or damage. These instructions must be adhered to constantly.

In order to obtain optimum efficiency and the longest possible service life for the generating sets, maintenance operations must be carried out according to the periods indicated in the attached maintenance tables. If the generating set is used under dusty or unfavourable conditions, some of these periods will be shorter.

Ensure that all adjustments and repairs are carried out by personnel who have received appropriate training. Our agents possess this qualification, and can answer all of your questions. They can also supply you with spare parts and other services and they have qualified staff to carry out preventive and corrective maintenance or even total reconditioning of generating sets.

The left and right sides can be seen from the back of the generating set (the radiator is at the front).

Note: some user and maintenance manuals for engines fitted to generating sets cover control units and include the start-up and shut down procedures for the engines.

As our generating sets are fitted with control units that are specific to the generating sets; only the information that appears in the documentation for the generating set control units should be taken into consideration.

In addition, depending on the manufacturing criteria of the generating sets, some engines may be fitted with specific electrical wiring different to that described in the engine documentation.

1.2. Warnings

In this manual, the warning messages are used as follows:

 DANGER	**Immediate danger.** Indicates an imminent danger which may result in death or serious injury. Failure to follow the instruction shown may pose serious risks to the health and life of those concerned.

 IMPORTANT	**Potential danger.** Indicates a dangerous situation if the warning is not heeded. Failure to follow the instruction indicated may cause minor injuries to those concerned or damage to equipment.

1.3. Pictograms and their meanings

The aim of the pictograms is as follows:

- To draw the attention of the operator or maintenance technician to the potential dangers.
- To explain how to act in the interest of personal safety and to avoid damaging the equipment.

The safety pictograms present on the equipment are explained below.

	Warning: danger		Important, Electrical risk		Important, risk of explosion
	Important, toxic materials		Important, rotating or moving parts		Important, pressurised fluids
	Important, high temperature		Important, corrosive product		Danger: automatic start-up

Figure 1 : Warning pictograms

	Entry prohibited to unauthorised persons		Jet washing prohibited

Figure 2 : Pictograms indicating prohibited activities

	Reading the manual for the equipment is compulsory		Wearing suitable protective clothing is compulsory		Wearing suitable protective goggles and ear defenders is compulsory
	Lifting point required		Forklift required for lifting		Battery charge must be checked
	Periodic maintenance compulsory				

Figure 3 : Pictograms indicating compulsory operations

	Earth	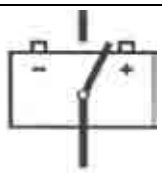	Battery isolating switch	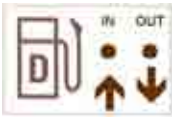	External fuel connections
	Diesel fuel		Drain the fuel		Inspection flap
	Fill the coolant		Drain the coolant	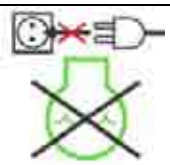	Mains supply connection prohibited before filling with water
	Fill the oil		Drain the oil		
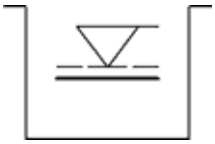	Retention container high level	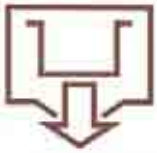	Drain the retention container		

Figure 4 : Information pictograms

 Flammable product, Do not smoke or create sparks or flames	 Reading the manual for the equipment is compulsory
 Fuel supply - Selection valve -	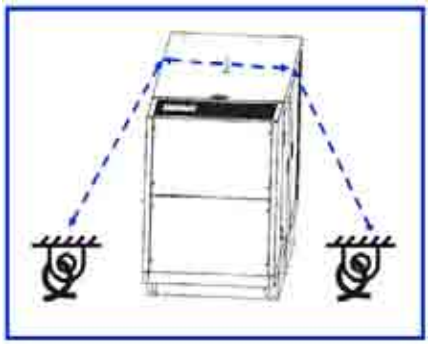 Securing straps routing point

Figure 5 : Specific pictograms

 Wearing suitable protective clothing and goggles is compulsory	 Rinse any splashes of acid on the skin or in the eyes using clean water. Consult a doctor immediately. Wash contaminated clothing with water.

Figure 6 : Pictograms relating to battery operations

1.4. Safety instructions

RETAIN THIS MANUAL

This manual contains important instructions which must be followed when installing or carrying out maintenance on a generating set and batteries.

IMPORTANT - SAFETY ADVICE

If any parts of this manual are not understood, or in case of doubt, contact your nearest agent in order to receive an explanation or demonstration to allow the equipment to be used correctly. The guidelines listed below must always be respected to ensure the safety of personnel and equipment. In addition to this information, it is essential to refer to the local and national regulations applicable according to the jurisdiction.

1.4.1 General guidelines

Installing the equipment

The installer of the equipment must create a document describing any modifications made to the equipment during installation.

Using the equipment

- *Before starting any operations on the equipment:*
  - Nominate an operations manager.
  - The role of the operations manager is to monitor, either directly or indirectly, any operations performed on the equipment and to ensure that the safety and operating instructions are respected.
  - The operations manager should read and understand all the documentation supplied with the equipment.

- *Information for personnel:*
  - Regularly reiterate the safety and operating instructions to the operating personnel.
  - Contact your dealer if you have any questions regarding the equipment and any training requests for personnel.
  - Make the manufacturer's instructions available to the users (if possible on site).

- *Protection for individuals and equipment:*
  - Wear suitable clothing.
  - Move away from equipment in operation.
  - Ensure that persons who are not authorised to intervene as well as animals are kept away from the equipment. Observe this guideline regardless of whether the equipment is in operation or stopped.
  - Protect the equipment from any fluid splashes and bad weather.
  - Before starting the equipment, refit the protective covers and close all the access doors.
  - Before starting the engine, check that the air filter is present and the correct extraction circuit for the exhaust gas.
  - Respect the current regulations relating to fuel use.
  - Under no circumstances use seawater or any other corrosive or electrolytic product in the cooling circuit.
  - Adjust the equipment according to the manufacturer's prescriptions.
  - Check that the equipment operates correctly.
  - Engage the parking brake when the equipment is installed on the operating site on its trailer. When chocking the trailer on a slope, ensure that there is nobody in the path of the trailer.

Maintaining the equipment

- *Personnel skills:*
  - Ensure that the maintenance operations are performed on the equipment by appropriately trained personnel.

- *Personnel protection:*
  - Wear suitable clothing and protective goggles.
  - Remove any personal belongings that may hinder the operation: watch, bracelet, etc.
  - Fit a panel over the controls of the equipment to prevent any attempt to start.
  - Disconnect the battery (and pneumatic starter if fitted) before beginning any maintenance operation.
  - Handle the equipment according to best practices, using techniques which do not endanger the personnel.
  - It is essential to wear gloves when detecting leaks.
  - Regularly check that the safety devices are operating correctly.

- *Equipment protection:*
  - Use tools in good condition and suited to the work to be done. Ensure you have understood the instructions before beginning any operation.
  - Respect the maintenance table and its recommendations. In dusty or unfavourable conditions, certain maintenance intervals will need to be reduced.
  - Check that the spare parts fitted on the equipment are supplied only by the dealer.
  - Handle the equipment according to best practices, using techniques which do not risk damaging the equipment.
  - Replace any safety pictograms that are missing or illegible on the equipment.

  Note: the mounting bolts on the protective devices of the rotating parts are captive bolts equipped with retaining washers. Also, in order to ensure the integrity of this assembly, it is prohibited to use electric or pneumatic screwdrivers to undo these mounting bolts.

- *Cleaning the equipment:*
  - Clean off any trace of oil, fuel or coolant using a clean cloth.
  - Use only approved cleaning solvents.
  - Cleaning products and methods that are strictly prohibited:
    - petrol or other flammable substances;
    - soapy solution containing chlorine or ammonia;
    - high pressure cleaner.

- *Additional instruction:*
  - If necessary, contact the dealer for the following reasons:
    - answers to any questions relating to the equipment;
    - training requests for personnel;
    - supplying the relevant documentation for maintenance operations;
    - supplying spare parts;
    - corrective or preventive maintenance operations.

Operating site

- *Maintenance:*
  - Clean the entire operating site regularly with suitable cleaning materials.
  - The presence of dangerous or combustible materials inside premises must be limited to the operating requirements.

- *Access:*
  - Prohibit free access to persons who are not part of the establishment, except for those designated by the user.

- *Respecting the environment:*
  - Drain and dispose of engine oil in a specially provided container (fuel distributors can collect your used oil).
  - Burning of waste in the open air is prohibited.
  - Remove waste water, sludge and other waste in a specialised processing centre.

1.4.2 Electrical safety precautions

DANGER	**ELECTRICAL EQUIPMENT - RISK OF ELECTRIC SHOCKS**	

- Read the manufacturer's identification plate carefully. The values for voltage, power, current and frequency are shown. Check that these values match the installation being supplied.
- The electrical connections must be made in accordance with current standards and regulations in the country of use and the neutral system sold.
- Ask a qualified electrician to intervene when there are specific cases requiring equipment to be connected to an existing electrical network.
- Disconnect the power to the equipment (equipment voltage, battery voltage and network voltage) before any installation or maintenance operation is performed.
- Connect the equipment wires by respecting the wiring diagram supplied by the manufacturer.
- Always handle the equipment with dry hands and feet.
- Take all the necessary precautions to avoid touching stripped cables or disconnected connectors.
- Use and maintain the cables in good condition, well insulated and connected correctly and securely.
- Only replace equipment that provides protection against electric shock with identical equipment (specifications and nominal values).
- Only use flexible durable cables with a rubber covering, which conform to ECI 245-4, or equivalent cables.
- Refit the protective plates (blanking covers) after each maintenance operation.

Note: The electrical equipment supplied with the equipment complies with standard NF C15.100 (France), or with the standards of the countries in question.

1.4.3 Safety precautions in case of electrical shock

In the event of an electric shock, observe the following instructions:

1. Avoid direct contact both with the live conductor and the victim's body.
2. Shut off the power immediately and activate the emergency stop for the equipment concerned. *Note: the live wire may be cut with an axe. Take extreme care to avoid the electric arc that will be generated by this.*
3. If it is impossible to access the equipment: move the victim away from the live conductor using a dry piece of wood, dry clothing or other non-conducting material.
4. Move the victim away from any situations where there is a danger of death.
5. Contact the emergency services.
6. If breathing has stopped, begin artificial respiration at once.
7. In the event of cardiac arrest, carry out cardiac massage.

1.4.4 Safety precautions relating to fire, burns and explosions

	DANGER	
	FUELS / FLAMMABLE PRODUCTS / PRESSURISED FLUID **- RISK OF BURNS -** **- RISK OF FIRE -** **- RISK OF EXPLOSION -**	

1. Before starting the equipment, move any flammable or explosive products away (petrol, oil, cloth, etc.).
2. It is prohibited to put combustible materials on the hot parts of the equipment (for example: exhaust pipe).
3. Avoid any contact with the hot parts of the equipment (for example: exhaust pipe).
4. Use appropriate ventilation to allow the equipment to cool correctly.
5. Wait for the engine to stop and cool down completely before removing the radiator cap.
6. Wait for the equipment to stop and cool down completely before covering the equipment (if necessary).
7. Depressurise the air, oil and cooling circuits before removing or disconnecting all the fittings, pipes or connected components.
8. Ensure that the equipment in operation is fixed (in a stationary position).

IMPORTANT	When installing the equipment on a vehicle or other mobile equipment, a study must be conducted beforehand in order to take into account the various specific uses of the generating set.

Fuels

- Respect current local regulations regarding the equipment and fuel used (petrol, diesel and gas).
- Top up the engine with fuel when the engine has stopped (except for equipment with an automatic filling system).
- Smoking, using a flame or producing sparks are forbidden while the fuel tank is being filled.
- Use protection suitable against fires and explosions.
- Pipes must be replaced as soon as their condition demands it.

Oils

1. Check that the system is no longer pressurised before carrying out any procedures.
2. Avoid contact with hot oil.
3. Wait for the engine to stop and cool down completely before topping up the oil.
4. Before starting the engine, refit the oil filler cap.
5. It is prohibited to cover the generating set with a fine layer of oil for anti-rust protection.

Battery

- Smoking, using a flame or producing sparks are forbidden close to batteries (particularly when the batteries are being charged).

Supply gas (concerns generating sets running on gas)

- Request the user technical notes and LPG or NG safety data sheets from your gas supplier.
- For any operation on a gas installation, ask a recognised specialist to intervene.
- Gas supply procedures must be carried out in the open air (outside) in accordance with local regulations, in an area well away from fires, people or animals.
- Check the sealing of the gas supply circuit using soapy water with the circuit pressurised, or using a leak detector.
- It is forbidden to smoke, bring flames near or create sparks when the tank is being filled, and near to the generating set.

1.4.5 Toxic risk safety precautions

	DANGER	
	EXHAUST GAS - TOXIC PRODUCTS **- TOXIC RISK -**	

Exhaust gas

- Use suitable ventilation to release the exhaust gas outside and prevent it from accumulating.
- Respect current local regulations regarding the equipment and fuel used (petrol, diesel and gas).
- Periodically examine the burnt gas exhaust.
- Pipes must be replaced as soon as their condition demands it.

Note: the carbon monoxide present in the exhaust gas may lead to death by inhalation if the concentration levels in the atmosphere are too high.

Corrosion inhibitor in the coolant *(contains alkali)*

- Read the instructions on the packaging.
- Keep the product out of the reach of children.
- Do not swallow it.
- Avoid prolonged or repeated contact with the skin.
- Never allow contact with the eyes.

In the event of contact with the eyes:

1. Rinse immediately with plenty of water for at least 15 minutes.
2. Consult a doctor immediately.

In the event of contact with the skin:

1. Wash thoroughly with water and soap.
2. Consult a doctor immediately.

Fuels and oils

- Do not swallow it.
- Ensure proper ventilation.
- Use a suitable protective mask.

Battery electrolyte

- Avoid all contact with the skin and eyes.
- Wear suitable protective goggles and clothing and strong alkali-resistant gloves for handling the electrolyte .

If splashes get into the eyes:

1. Rinse immediately with running water and/or a 10% diluted boric acid solution.
2. Consult a doctor immediately.

1.4.6 Precautions for risks relating to handling phases

	DANGER	
	HANDLING PHASES - RISK OF DROPPING	

1. Select the appropriate handling equipment and apparatus according to the type of equipment being handled. Check that there is sufficient handling capacity.
2. Check that the handling equipment and apparatus are in good operating condition.
3. Respect the handling instructions described in the present documentation and the pictograms displayed on the equipment to be handled.
4. Be sure never to stand under the load being handled.

Note: the lifting rings provided on the equipment are designed to handle the generating set alone. If additional equipment is fitted to the generating set, a study should be conducted in order to define the centre of gravity of the assembly and to check the correct mechanical performance of the structure and its lifting rings.

1.4.7 Precautions for risks relating to noise

DANGER	**HIGH SOUND LEVEL - RISK OF HEARING LOSS**	

- Always use suitable ear defenders when working in close proximity to a generating set which is in operation.

Note: for generating sets used inside, for which the ambient noise levels are dependent upon the installation conditions, it is not possible to specify these ambient noise levels in the operating instructions. As prolonged exposure to high sound pressure levels can cause permanent damage to hearing, it is necessary to measure the acoustics after installation in order to determine the sound pressure level and, if necessary, to implement the appropriate preventive measures.

2. General description

2.1. Description

Overview

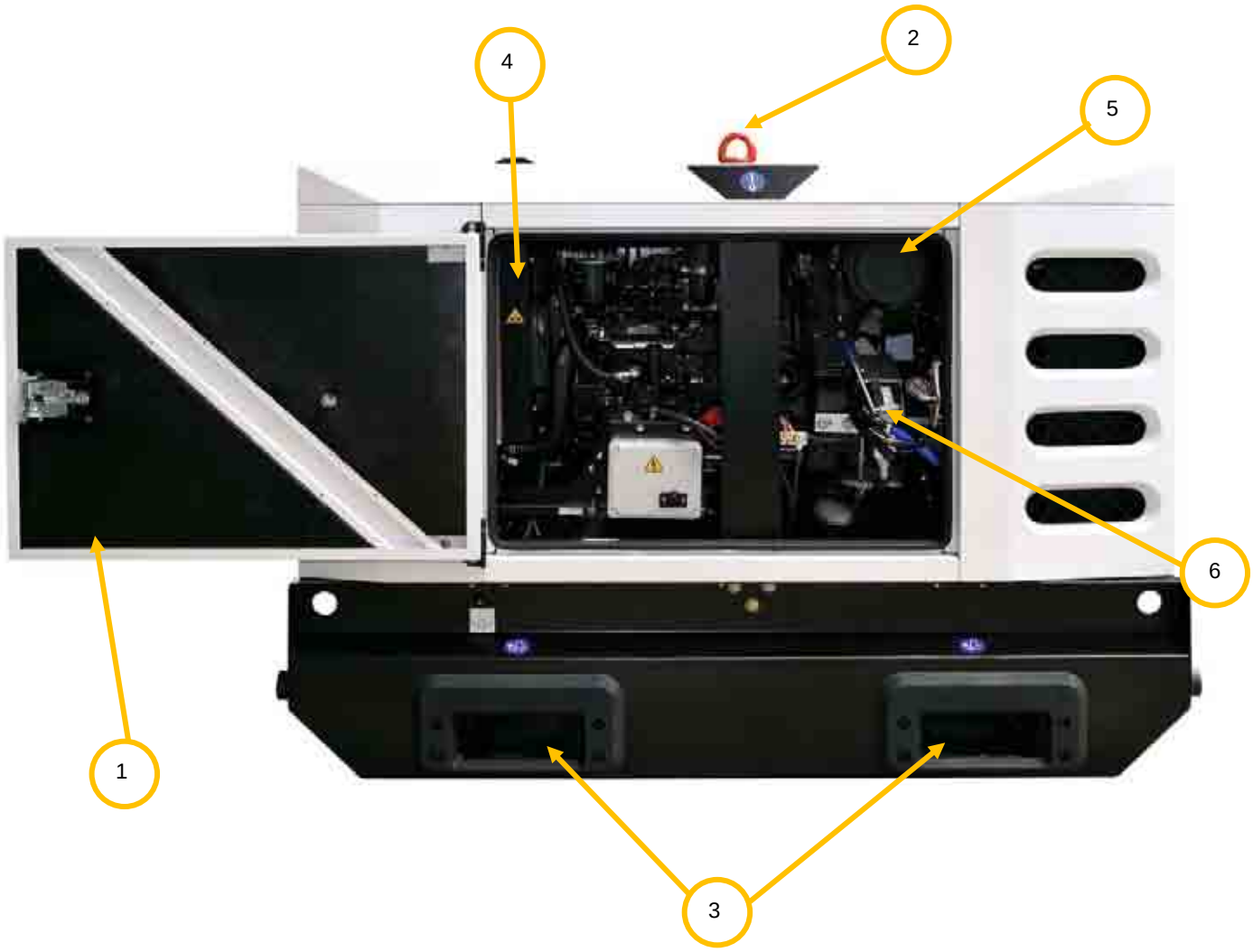

Figure 7 : General description of the generating set

1	Acces to maintenance area	4	Protective grille
2	Lifting ring	5	Air filtration
3	Forklift grooves	6	Oil drainage pump

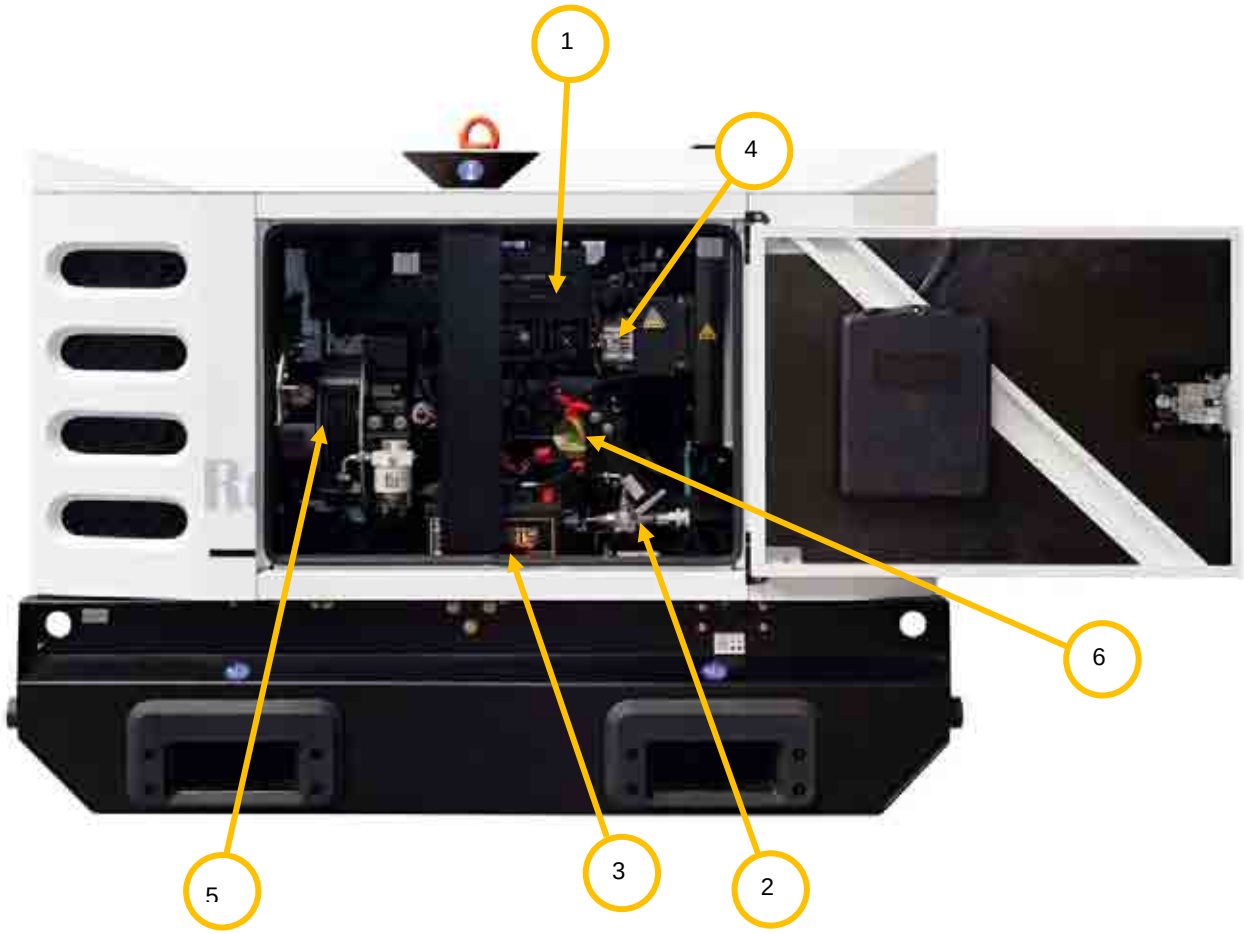

Figure 8 : General description of the generating set

1	Engine	4	Charging alternator
2	External fuel supply combined tap (optional)	5	Alternator
3	Starter battery	6	Battery isolating switch

Control

Figure 9 : General description of the generating set

1	Control unit	4	Working hours counter
2	Emergency stop	5	Power circuit breaker
3	Socket control panel	6	Connection terminal block

Note : Photo presented with the Nexys control unit.

2.2. Technical specifications

Range / Generating set type	RENTAL POWER / R16CC

Weights and Dimensions

Dimensions with high autonomy tank

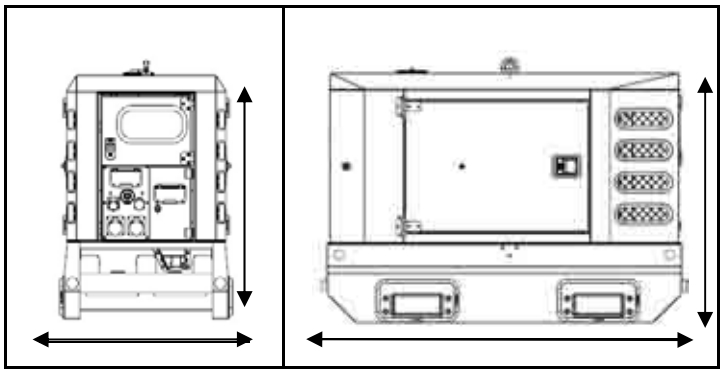

Dimensions l x w x h
1850 mm x 901 mm x 1355 mm

Weight:
794 kg dry weight / 937 kg in operating configuration

Hood:
M3126

Sound pressure level:
at 1 m: 73 dB(A)
measurement uncertainty : 0,55

Output

Voltage	Hz	Phase	Load factor	Max current (A) Emergency	Emergency power [1] kW / kVA	Prime power [2] kW / kVA
400/230	50	3	0.8	23	12.8 / 16	11.6 / 14.5

(1) ESP: Stand-by output available for emergency use under variable charge up to 200hrs per year as per ISO 8528-1, no overload available under these service conditions.
(2) PRP: Main output available continuously under variable load for an unlimited time period per year as per ISO 8528-1, an overload of 10% one hour every 12 hours is available, as per ISO 3046-1.
- Term of use :
Standard reference conditions ESP/PRP 40° / 40°, Air Intlet Temp, 1000m / 1000m mA.S.L. 60 % relative humidity.

Engine data	
Manufacturer / model	MITSUBISHI S4L2-SD
Type	4 Cycles Naturally aspirated
Cylinder configuration	4 XL
Cubic capacity	1.76 L
Rotation speed	1500 Rpm
Max emergency/prime power at nominal speed	15.8 / 14.4 kW
Adjustment type	Mechanical

Fuel consumption	
100 % main power	4.4 L/h
75 % main power	3.4 L/h
50 % main power	2.6 L/h

Fuel	
Fuel type	Diesel
High autonomy fuel tank	155 L

Lubrication	
Oil capacity	5.9 L
Min. Oil pressure	1 bar
Nominal oil pressure	4 bar
Oil consumption (100 % load)	0.025 L/h
Oil sump capacity	5.5 L
Type of lubricant	Genlub

Cooling	
Engine capacity with radiator	4.9 L
Max coolant temperature	111 °C
Fan power	0.7 kW
Ventilator air flow	0.8 m3/s
Refrigerant type	Gencool
Thermostat	82 – 95 °C

Alternator data	
● Compliant with NEMA MG21 standards, UTE NF C51 111, VDE 0530, BS 4999, IEC 34.1, CSA	● The alternator is protected against short circuits ● Vacuum impregnation, epoxy winding, IP23 protection rating
Type	LEROY SOMER LSA40S3
Number of phases	3
Power factor (cos Phi)	0.8
Number of poles	4
Excitation type	AREP
Insulation classe	H
Number of bearings	1

Control unit(s)	
NEXYS 	<u>Standard specifications</u>: Frequency meter, Voltmeter, Ammeter <u>Alarms and faults</u>: Oil pressure, Coolant temperature, Fail to start, Overspeed, Alternator min/max, Fuel level low, Emergency shutdown <u>Engine parameters</u>: Working hours counter, Engine speed, Battery voltage, Fuel Level, Air Preheating
TELYS 	<u>Standard specifications</u>: Voltmeter, Ammeter, Frequency meter <u>Alarms and faults</u>: Oil pressure, Water temperature, Start failure, Overspeed, Alternator min/max, Battery voltage min/max, Emergency stop <u>Engine parameters</u>: Timer, Oil pressure, Water temperature, Fuel level, Engine speed, Battery voltage

2.3. Identifying sets

Generating sets and their components are identified by means of identification plates.

The precise rules for identifying each major component (engine, alternator, etc.) are set out in each manufacturer's documentation contained in the appendices of this manual.

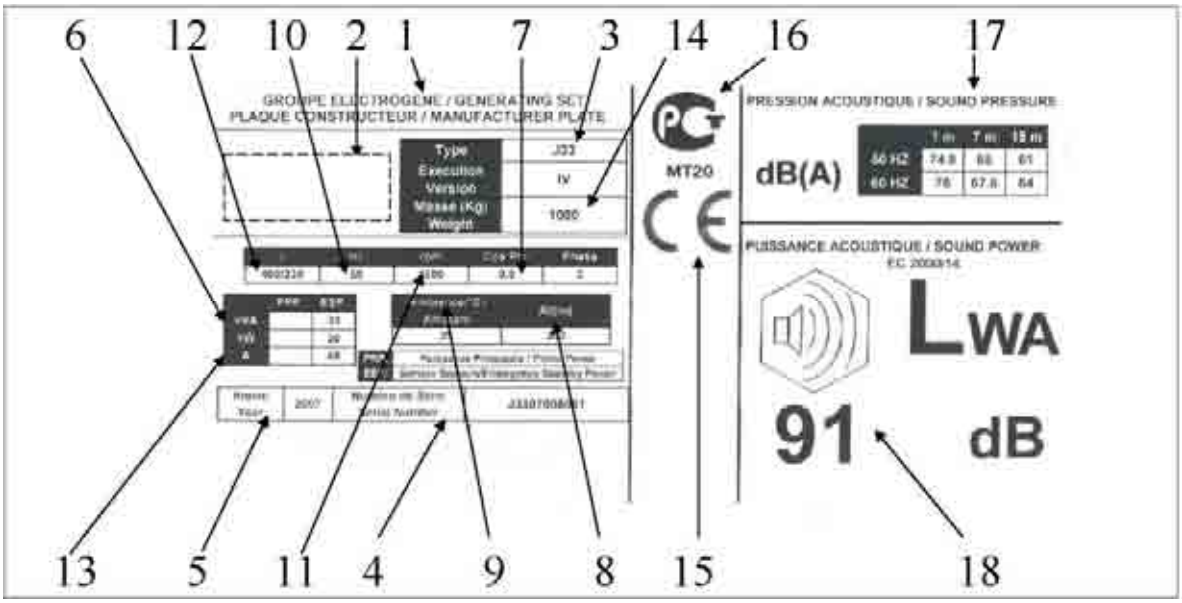

1 - Generating set	9 - Maximum ambient temperature for the rated power (°C)
2 - Manufacturer name	10 - Rated frequency (Hz)
3 - Model	11 - Generating set rotation speed (RPM)
4 - Serial number	12- Rated voltage (V)
5 - Year of manufacture	13 - Rated current (A)
6 - Rated output (kVA and kW) according to the ISO 8528-1 standard PRP: main power ESP: emergency power	14 - Weight (kg)
7 - Rated power factor	15 - CE marking
8 - Maximum altitude of the site above sea level (m) for the rated power	16 - Non CE standard arking(e.g.: GOSSTANDART)
	17 - Sound pressure
	18 - Sound power

Figure 10 : Example of a generating set identification plate

2.4. Fluid retention

Any outflow of the fluids contained in the generating sets (fuel, oil and coolant, or rainwater or condensation) will be collected in a retention container.
The containers have a capacity which allows 110% of the fluids contained in the generating set fitted with this option to be collected.

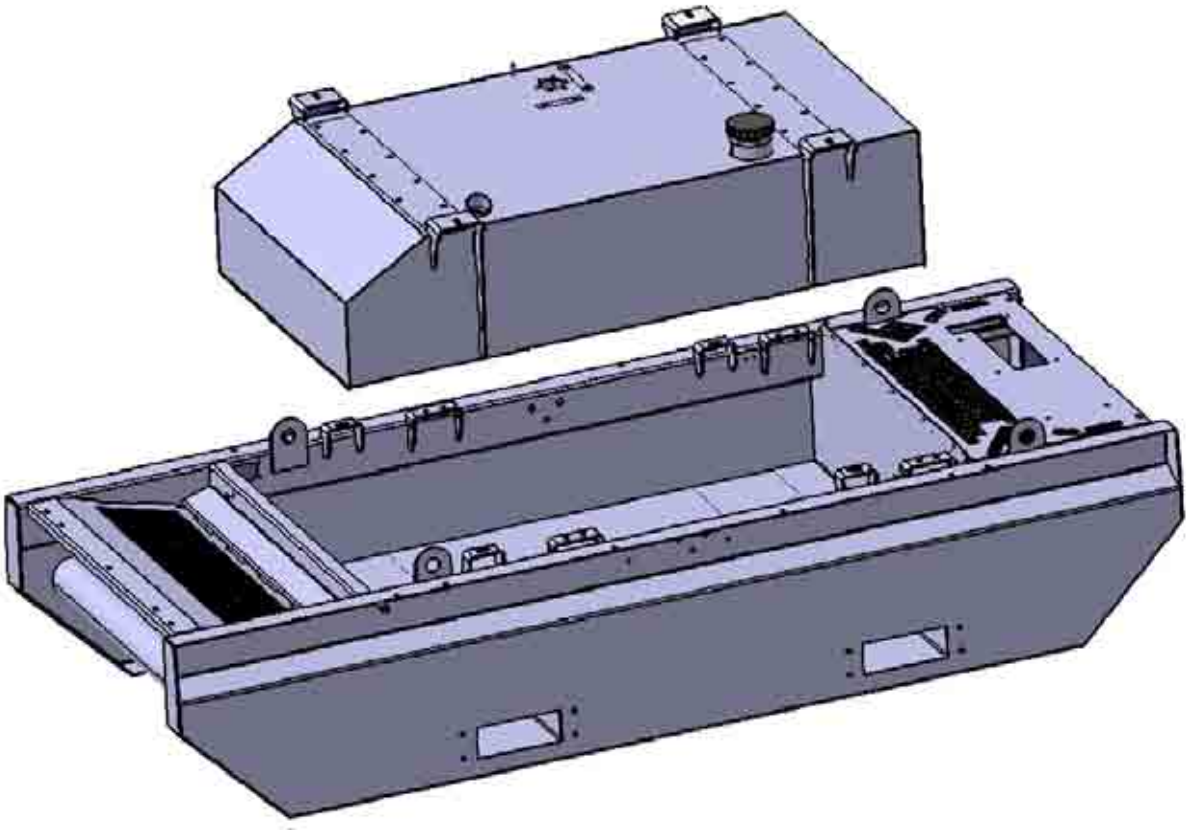

Figure 11 : Fluid retention container

The generating sets are fitted with a visual alarm warning when the upper limit of the retention container has been reached.

In all cases, the retention containers must be regularly checked to ensure they contain no fluid (fuel, oil and coolant, or rainwater or condensation). If necessary, drain the containers via the drain port.

- ✓ **Note**: Never allow these fluids to drain onto the ground; ensure they are collected in a designated container.

2.5. Fuels, lubricants and coolants

All specifications (product features) are given in the engine and alternator maintenance manuals attached to this manual.

In addition to these, we recommend the fuels, lubricants and coolants mentioned in the "Specifications" section.

2.5.1 Fuel specifications

General quality requirements

The quality of the fuel is essential for engine performance. It affects the technical performances such as the service life, power supplied and fuel consumption as well as the ability to respect the requirements issued by authorities relating to pollutant emissions. **Only fuels which conform to the current legal requirements and national and international standards should be used**. Consult the local fuel distributor to find out the characteristics of the diesel fuel available in the area.

Examples of standards and requirements:

EN 590	European standard (CEN) for vehicle fuel - fuels for diesel engines (diesel fuel) - requirements and test methods
ASTM D 975 1-D and 2-D	American Society for Testing and Materials: basic requirement in the United States and Canada
JIS KK 2204	Japanese Industrial Standards: Japanese industrial standards

Respecting pollutant emissions

The certification measures confirming that the legal emission value limits are respected are performed with certified fuels which conform to the standards and requirements stated above.

Resistance to low temperatures

When the external temperature is low, the fluidity of diesel fuel may no longer be sufficient due to paraffin deposits. Also, in the winter in order to avoid malfunctions (for example, clogged filters), use diesel fuels which are fluid enough in cold weather.

The requirements to respect for the various geographical regions and various seasons (winter/summer) are specified in the standards and/or national regulations. Petrol companies should always supply fuels with the correct flow properties regardless of the time of year. In general, diesel fuel is treated with additives so that the fuel can be used at low temperatures in the region where it is marketed.

Treating fuel with additives must respect the engine manufacturer's recommendations and maintain a suitable lubricity for the injection systems. It is recommended to favour fuels whose additives have been added in a refinery over those modified in the storage tank.

General specifications for diesel fuel

The fuel used must have the following characteristics (non-exhaustive list):

Sulphur content	The sulphur content must meet the current emissions regulations in the region where the generating set is used. ***For the United States and countries respecting the EPA regulation*** Only use Ultra Low Sulphur Diesel (ULSD) fuel with a maximum sulphur content of 15 mg/kg for Interim Tier 4 and Tier 4 certified engines. ***For the European Union*** Directive 2009/30/CE whose aim is to limit atmospheric pollution, imposes the use of a diesel fuel with a very low sulphur content of 10 mg/kg, for non road mobile machinery. In France, this obligation has resulted in the development of a diesel fuel called "off road diesel fuel" or "*GNR*". The maximum admissible sulphur content is 10 mg/kg. However, member states allow these diesel fuels to contain up to 20 mg/kg of sulphur when they are distributed to the final users. It is recommendable to avoid storing off road diesel fuel for long periods of time (over 6 months).
Viscosity and density	The viscosity and density directly affect the performance (power and fuel consumption), emissions and service life of the engine. A low level of viscosity and density reduces engine power and increases fuel consumption. Too high a level of viscosity and density seriously reduces the service life and operation of the fuel injection system. In order to maintain adequate technical and environmental performance, the viscosity and density must conform to the specifications indicated in the manufacturer's instructions for the engines fitted to our generating sets.
Lubricity (or capacity for lubrication or oiliness)	In order to protect the fuel injection system against excessive wear, the fuel must have satisfactory lubricity (refer to the manufacturer's instructions for the engines fitted to our generating sets).
Cetane index	The ignition behaviour of diesel fuels is described by the cetane index. The cetane index is important for emissions, the ability to start in cold weather and engine noises. The minimum technical requirements are 45.
Water and contaminants	The fuel and tank must not contain any water. Water causes the engine parts to corrode and wear more rapidly, particularly the injection system parts. In addition, water promotes the growth of bacteria and fungi in the tank, which can clog the fuel filter. The fuel must not contain any type of residue. Organic contaminants (bacteria, fungi, etc.) can block the fuel filters; inorganic material in the fuel (dust, sand) can cause serious damage to the injection equipment.

2.5.2 Lubricant specifications

Essential for the correct operation of the engine. The oil should be selected according to its use. Besides the lubrication function, oil should also:

- cool certain parts;
- protect metal parts against corrosion;
- improve the sealing, in particular between pistons, piston rings and cylinders;
- remove impurities (to the filter).

It is recommendable to use a top of the range lubricant for diesel engines. The table below lists the oils recommended for each engine manufacturer.

Engine			
Make	Type	Make	Type
Cummins	All	GenPARTS	GENLUB TDX 15W40
John Deere	All	John Deere	John Deere PLUS-50
		GenPARTS	GENLUB TDX 15W40
MTU	All	GenPARTS	GENLUB TDX 15W40
Mitsubishi	All	GenPARTS	GENLUB TDX 15W40
Perkins	Fuel	GenPARTS	GENLUB TDX 15W40
	Gas	MOBIL	PEGASUS 705
Volvo	All	GenPARTS	GENLUB TDX 15W40
Doosan	All	GenPARTS	GENLUB TDX 15W40
Lombardini Kohler	All	GenPARTS or Kohler	GENLUB TDX 15W40 or Kohler 5W40, according to the model of the engine

Viscosity

Viscosity is a measure of the flow resistance of a fluid. The viscosity of an engine oil is expressed by 2 SAE (Society of Automotive Engineers) grades. One grade for cold weather and one grade for hot weather. The grade for cold weather appears before the letter W.

The 1st grade represents dynamic viscosity in cold weather, namely the ability to start the engine and to prime the oil pump (and therefore to lubricate the various components quickly). The lower the number, the more fluid the oil.

The 2nd grade represents the kinematic viscosity in hot weather. The higher the number, the thicker the film of oil when hot (which aids protection and sealing). The lower the number, the less friction there will be in hot weather (it helps to save fuel).

In order to ensure immediate protection when starting the engine, the choice of viscosity grade when cold is essential. More fluid oil is quicker to flow when oil begins to circulate through the engine. It should be selected according to the ambient temperature. See the table below.

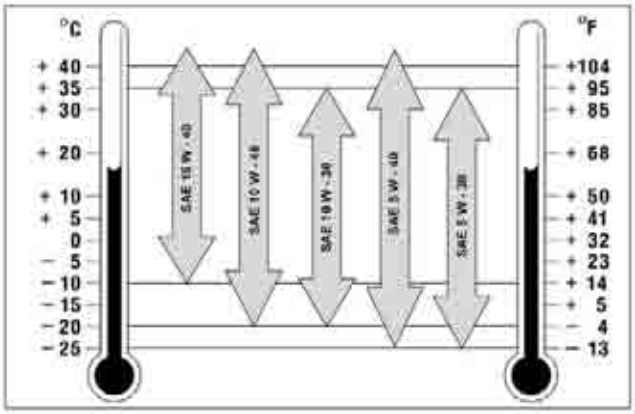

Characteristics of GENLUB TDX 15W40 oil

Performance

GENLUB TDX oil is a 15W40 multigrade mineral oil which meets the following specifications: ACEA E3 and API CG-4.

ACEA E3: oil with superior viscosity stability, suited to extended oil change intervals and severe conditions of use.

API CG-4: oil particularly effective to meet the emissions requirements.

ACEA = European Automobile Manufacturers' Association

API = American Petroleum Institute

Specifications

Specifications	Units	Grade SAE 15W-40
Density at 15°C	kg/m^3	883
Kinematic viscosity at 100°C	mm^2/s (cSt)	14
Viscosity index	–	130
Flow point	°C	- 27°
Flash point	°C	>200
TBN*	mgKOH/g	9.7

Typical values given for information purposes

** TBN (Total Base Number – degree of alkalinity): a measure of a lubricant's reserve alkalinity according to standard ASTMD 2896. This check makes it possible to assess the ability of the product to remain in service and to check the 'capacity of the lubricant to neutralise the acidity contained in the oil, which may corrode the metallic elements of the lubricated component.*

2.5.3 Coolant specifications

The engine's internal cooling system allows the engine to operate at a precise temperature.

The table below lists the coolants recommended for each engine manufacturer.

Engine			
Make	Type	Make	Type
Mitsubishi	All	Mitsubishi	LLC
		GenPARTS	GENCOOL PC -26
MTU	All	GenPARTS	GENCOOL PC -26
John Deere	All	GenPARTS	GENCOOL PC -26
Volvo	All	GenPARTS	GENCOOL PC -26
Doosan	All	GenPARTS	GENCOOL PC -26

Specifications of GENCOOL PC -26 coolant

Performance

GENCOOL PC -26 coolant is a ready-to-use cooling fluid which provides a high level of protection and is produced from an antifreeze approved by the majority of manufacturers (Power Cooling concentrated antifreeze).

It offers the following:

- Improved anticorrosion: improves the effectiveness and service life of the cooling system.
- High temperature feature: promotes heat exchange.
- Long-term protection: against overheating and corrosion under extreme conditions of use.
- Compatible with the original fluid (however, it is recommended to drain the entire cooling system when replacing the fluid).

Specifications

Specifications	Units	Characteristics
Density at 20°C	kg/m^3	1053 ± 3
pH	pH	7.5 to 8.5
Alkalinity reserve	ML	≥ 10
Boiling temperature	°C	105 ± 2
Freezing temperature	°C	-26 ± 2

Typical values given for information purposes

3. Transporting the equipment

3.1. Warnings concerning transport

!	It is prohibited to operate generating sets whilst they are being transported.
IMPORTANT	

3.2. Preparing for transport

Before the equipment is transported, perform the following operations:

1. Close the tap on the oil top up tank outlet.
2. Fill up the oil top up tank with oil.
3. Fill up the crankcase with oil.
4. Fill up the on-board tank with fuel.
5. Check that the batteries are fitted and filled with electrolyte.

3.3. Road transport

3.3.1 Generating sets with and without an enclosure

Generating sets must be transported by road in accordance with the regulations of the countries concerned.

When transporting generating sets in containers by road, the following steps must be observed:

1. Put a plastic cover over non-enclosed generating sets during transportation.
2. Select transport equipment (trailer, semi-trailer, etc.) suitable for this usage and having all the safety guarantees in terms of load bearing capacity and of the securing devices.
3. Chock and fix the generating sets to the floor of the transport equipment.
4. Strap the generating sets to the transport equipment.
5. Select a transport route which makes it possible to travel on roads suitable for vehicles, and whose quality will not damage the on-board generating sets.

3.3.2 Generating sets on trailers

3.3.2.1. Hitching and unhitching the trailer

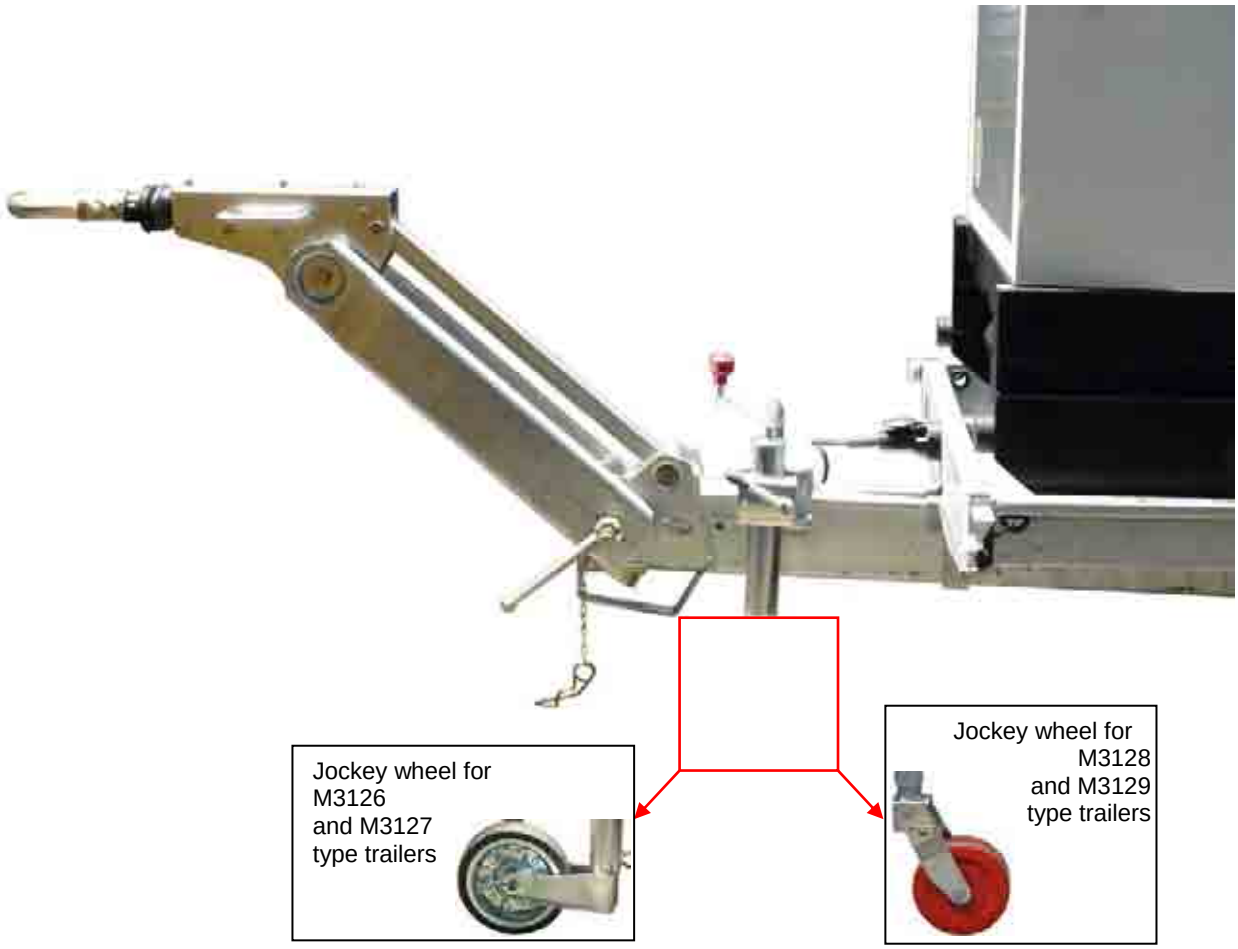

Before hitching the trailer, check the hitching system on the towing vehicle; this must be perfectly compatible with the trailer.

! **IMPORTANT**	Towing a trailer with a non-compliant device (bar, cables, lashing, etc.) runs the risk of serious accidents. Also check: - That there are no incipient ruptures or significant wear on the hitching system. - That the locking system is working properly.

Hitching a trailer fitted with a hitching ring

1. Drive the towing vehicle or bring the trailer up to the hitching point, then:
   - With the jockey wheel touching the ground, place the stabiliser (1) in the top position:
     - ➢ Loosen the jaw of the stabiliser (2) with its lever;
     - ➢ Raise the stabiliser fully;
     - ➢ Tighten the jaw of the stabiliser (2) with its lever.
   - Remove the wheel chocks if necessary and store them.

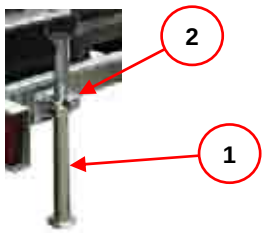

2. Position the trailer parallel to the ground using the guide wheel handle (jockey wheel).
3. Place the hitching ring above the towing vehicle's hitching system:

! **IMPORTANT**	After this adjustment, the trailer must remain parallel to the ground. Make any necessary height adjustments to the towbar using the jockey wheel to enable hitching.

- Remove the safety pin from the towbar (3);
- Undo the nut with the lever (4);
- Use the adjustable towbar handle to place the ring above the hitching system;
- Tighten the nut to lock the towbar;
- Fit the towbar safety pin.

4. Attach the ring to the hitching system:
   - Lower the trailer by moving the jockey wheel away from the ground using its handle (5).

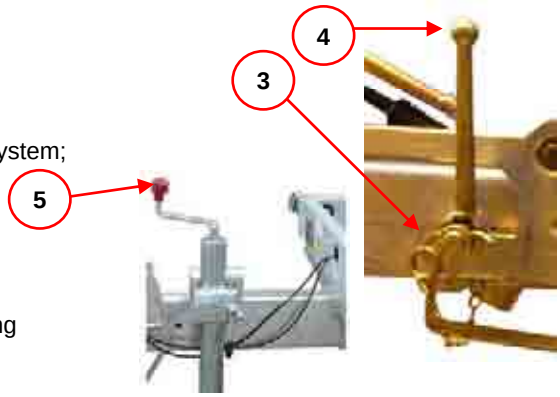

5. Lock the jockey wheel in the towing position:

! **IMPORTANT**	When in the towing position, the jockey wheel must not: - obstruct the unlocking cable's movement; - trap any electrical cables.

M3126/M3127 type trailers

- Position the jockey wheel at the rear.
- Raise the jockey wheel with its handle (5) into the notches on its tube (6).
- Loosen the jaw of the tube (7) with its lever.
- Raise the tube fully.
- Tighten the jaw of the tube (7) with its lever.

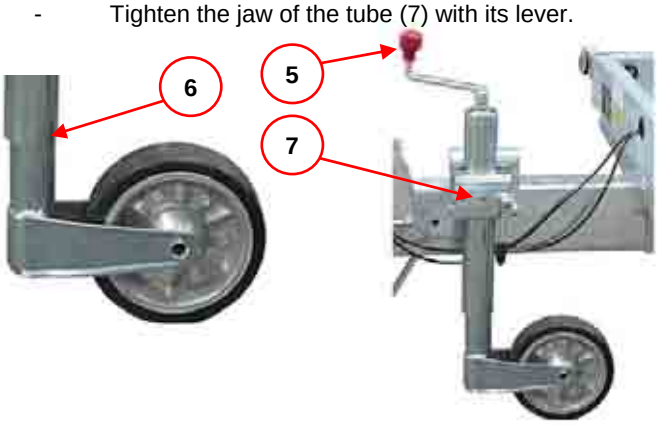

M3128/M3129 type trailers

- Remove the safety pin from the position lock (8).
- Remove the position lock (8).
- Place the jockey wheel in the towing position.
- Fit the position lock (8).
- Fit the safety pin in the position lock (8).
- Raise the jockey wheel with its handle fully and at right angles to the towbar.

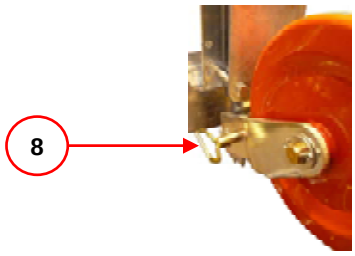

6. Attach the unlocking cable to the hitching plate on the towing vehicle.

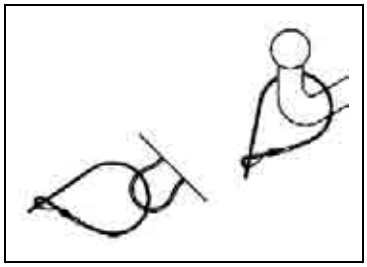

Examples of how to attach the hitching cable

!	If the hitching ring is not correctly connected to the hitching hook, the trailer will become separated from the towing vehicle. In this case the unlocking cable actuates the parking brake (which then becomes an emergency brake).
IMPORTANT	To ensure that the device fulfils its function correctly, the unlocking cable: - MUST NOT be wound around the jockey wheel, as this will disable emergency braking; - MUST NOT be taut or obstructed, as this could activate emergency braking during towing; - MUST be routed as straight as possible and not be obstructed at any point; - MUST be sufficiently long to allow cornering.

7. Connect the electrical cable plug controlling the lamps, indicators, etc. to the socket on the towing vehicle.
8. Remove the parking brake:

- Remove the wheel chocks if necessary and store them;
- Perform the following operations simultaneously on the parking brake:
  - ➢ Press the unlocking button (9);
  - ➢ Lower the handle (10) fully.

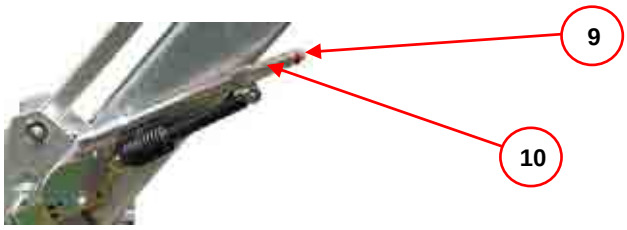

Unhitching a trailer fitted with a hitching ring

1. Immobilise the trailer:

- Chock the wheels;
- Apply the parking brake:
  - ➢ Raise the parking brake lever (10) fully.

2. Disconnect the electrical cable plug controlling the lights, indicators, etc. from the socket on the towing vehicle.
3. Remove the unlocking cable on the towing vehicle.
4. Release the hitching ring:

M3126/M3127 type trailers

- Disengage the jockey wheel from the notches in the tube (6) with its handle (5).
- Loosen the jaw of the tube (7) with its lever.
- Lower the tube until the jockey wheel touches the ground.
- Tighten the jaw of the tube (7) with its lever.

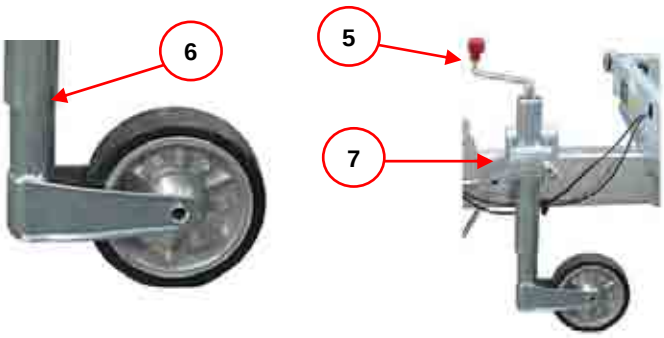

M3128/M3129 type trailers

- Remove the safety pin from the position lock (8) on the jockey wheel.
- Remove the position lock (8).
- Place the jockey wheel in the bottom position.
- Fit the position lock (8).
- Fit the position lock pin.
- Lower the jockey wheel to the ground with its handle.

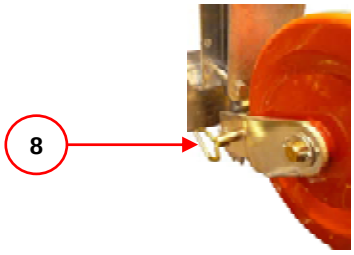

- Support the load on the jockey wheel:
  - ➢ Lower the jockey wheel with its handle;
  - ➢ When you are sure that the wheel can bear the load (the towbar rises), unhitch the trailer from the vehicle.

5. Fit the stabiliser (1):

- Loosen the jaw of the stabiliser (2) with its lever;
- Place the stabiliser in contact with the ground;
- Tighten the jaw of the stabiliser (2) with its lever.

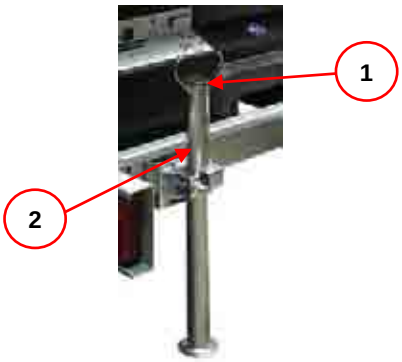

3.3.2.2. Check before towing

IMPORTANT	**Before first use, it is essential to check the tightness of the wheel bolts.**

Before towing, check the following:

- Wheel tightness.
- Hitching hook locked.
- Tyre pressure.
- Signalling lights working.
- Enclosure doors closed.
- Parking brake released, for "on-road" trailers.
- Guide wheels (jockey wheels) and stands lifted.
- Safety cable fitted, for "on-road" trailers.

INFLATION PRESSURE (BAR)			
145R13	2.2	185R14C	4.5
155 / 70R13	2.5	195R14C	4.5
185 / 70R13	2.5	215R14C	4.5
175R14C	4.5	215 / 75R14C	4.5

TIGHTENING TORQUE WHEELS	
Axis of 10	60 Nm
Axis of 14 and 16	120 Nm

3.3.2.3. Operation

The driving speed must be suited to the condition of the road and the handling of the trailer.

Maximal speed on road: 140km/h.

Driving at high speed causes the tyres to heat; it is therefore important to stop from time to time and check them. Excessive heating may cause a puncture, and therefore a serious accident. For reversing manoeuvres, remember to lock the inertia brake.

IMPORTANT	Particular attention must be paid to the tightness of the wheels on new vehicles. In the first few miles' driving, heating of the brake hubs and drums will actually reduce the wheel tightness. It is therefore essential to check the tightness every 6 miles (10 kilometres) until no further loosening is noted. The tightness check must nonetheless be carried out whenever you have towed the trailer.

Lights / signalling

Warning lights are obligatory for on-road driving. Signalling must comply with regulations in force in the country of use.

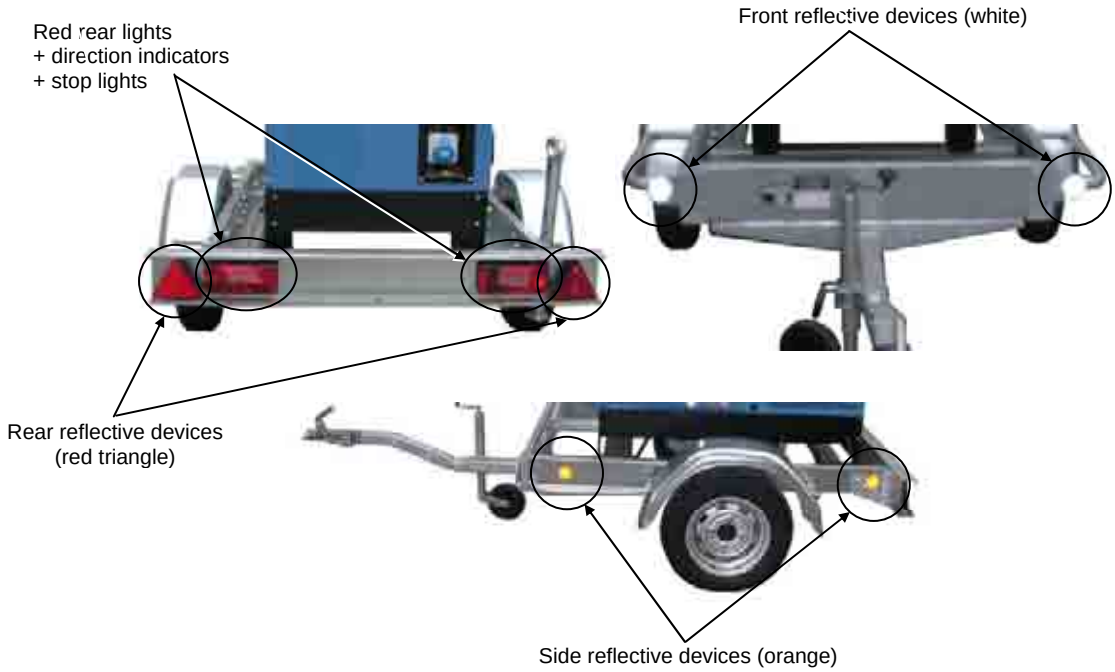

Figure 12 : Example of French signalling

3.4. Rail transport

3.4.1 Generating sets with and without an enclosure

Generating sets must be transported by rail in accordance with the specific rules governing rail transport.

When transporting generating sets in containers by rail, the following steps must be observed:

1. Put a plastic cover over non-enclosed generating sets during transportation.
2. Choose transport equipment appropriate for this usage, and having all the safety guarantees both in terms of load-bearing capacity and securing devices.

3.5. Shipping

3.5.1 Generating sets with and without an enclosure

Transportation must be carried out in accordance with the rules of shipping. Generating sets must be transported in a shipping container.

When shipping generating sets in containers, the following steps must be observed:

1. Choose transport equipment appropriate for this usage, and having all the safety guarantees both in terms of load-bearing capacity and securing devices.
2. In the case of a grouped load container, SEI cases must be used for packing.

3.6. Air transport

Containers must be transported by air in accordance with the specific rules governing air transport.

The UN has classified generating sets as "dangerous goods" listed under UN code 3166 - class 9 - "Engine, internal combustion (flammable liquid powered)".

Any air shipment of generating sets must be subject to prior declaration to the air freight company, in accordance with form MOD3909.

For air transport, observe the following steps:

1. Choose transport equipment appropriate for this usage, and having all the safety guarantees both in terms of load-bearing capacity and securing devices.
2. For control boxes, packing in an SEI 4 C case (solid case with waterproof cover) is obligatory.

4. Installation - Connections

4.1. Unloading the generating set

4.1.1 Choosing the location

When choosing where to site the generating set, bear in mind the:

- proximity to the electrical distribution panel;
- nuisance caused by the noise;
- fuel supply;
- burnt gas evacuation;
- direction of these gases and the noise generated.

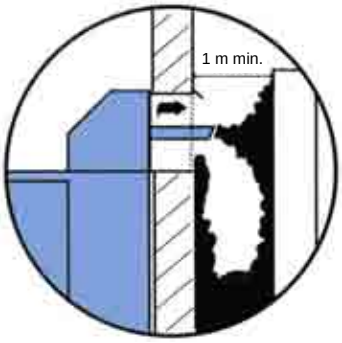

Incorrect ventilation and exhaust

Building or terrain too rough
Generating set incorrectly seated

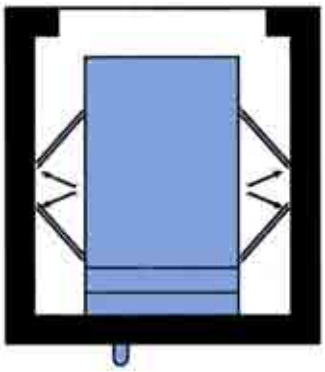

Impossible to open enclosure doors

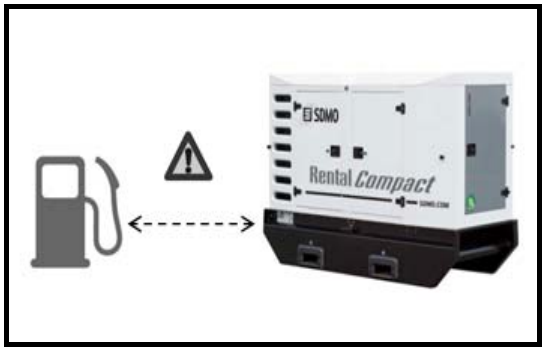

Impossible to fill with fuel

Figure 13 : Examples of problems that may be encountered

4.1.2 Safety during unloading

! IMPORTANT	Always follow the safety instructions before unloading

- The lifting machinery or equipment is suitable for the work required and the weight of the generating set. This is indicated on the generating set's identification plate.
- The sling is correctly positioned in the central lifting eye or the lifting arms are correctly positioned in the fork-lift pockets intended for this purpose.
- The ground is able to bear the load of the generating set and its lifting machinery without stress (otherwise lay down stabilising beams of sufficient strength).
- The generating set is put down as close as possible to its place of use or transport, in a clear space with free access.

Example of equipment to be used:

- ✓ crane;
- ✓ slings;
- ✓ lifting beam;
- ✓ safety hook;
- ✓ shackles;
- ✓ Forklift truck.

4.1.3 Unloading the generating set

! IMPORTANT	Before unloading or moving generating set, check that the handling equipment used is able to bear the weight of the generating set (shown on the generating set's identification plate.

4.1.3.1. Slings

1. Attach the sling on the lifting equipment to the ring on the generating set (no. 1) provided for this purpose. Tension the slings slightly.
2. Check that the sling is correctly attached and the equipment is steady.
3. Lift the generating set carefully.
4. Direct the generating set towards the chosen location and stabilise it.
5. Carefully set down the equipment while continuing to position it.
6. Release the sling, then detach it.

4.1.3.2. Fork lift truck

1. Position the arms of the forklift truck in the forklift pockets (no. 2).
2. Lift the equipment, handling it gently.
3. Set down the generating set in its unloading position.

Figure 14 : Points used for lifting and moving

4.1.4 Moving the generating set

Whenever moving the generating set, ensure suitable equipment is used (e.g. sling, forklift, etc.) and identify those parts on the generating set which can be used to move it:

- lifting eye (no.1);
- forklift grooves (no.2);
- tow bar (no.3).

4.2. Connecting the generating set

4.2.1 Connection summary

This diagram can be used to retrace the different steps enabling the generating set to be correctly connected.

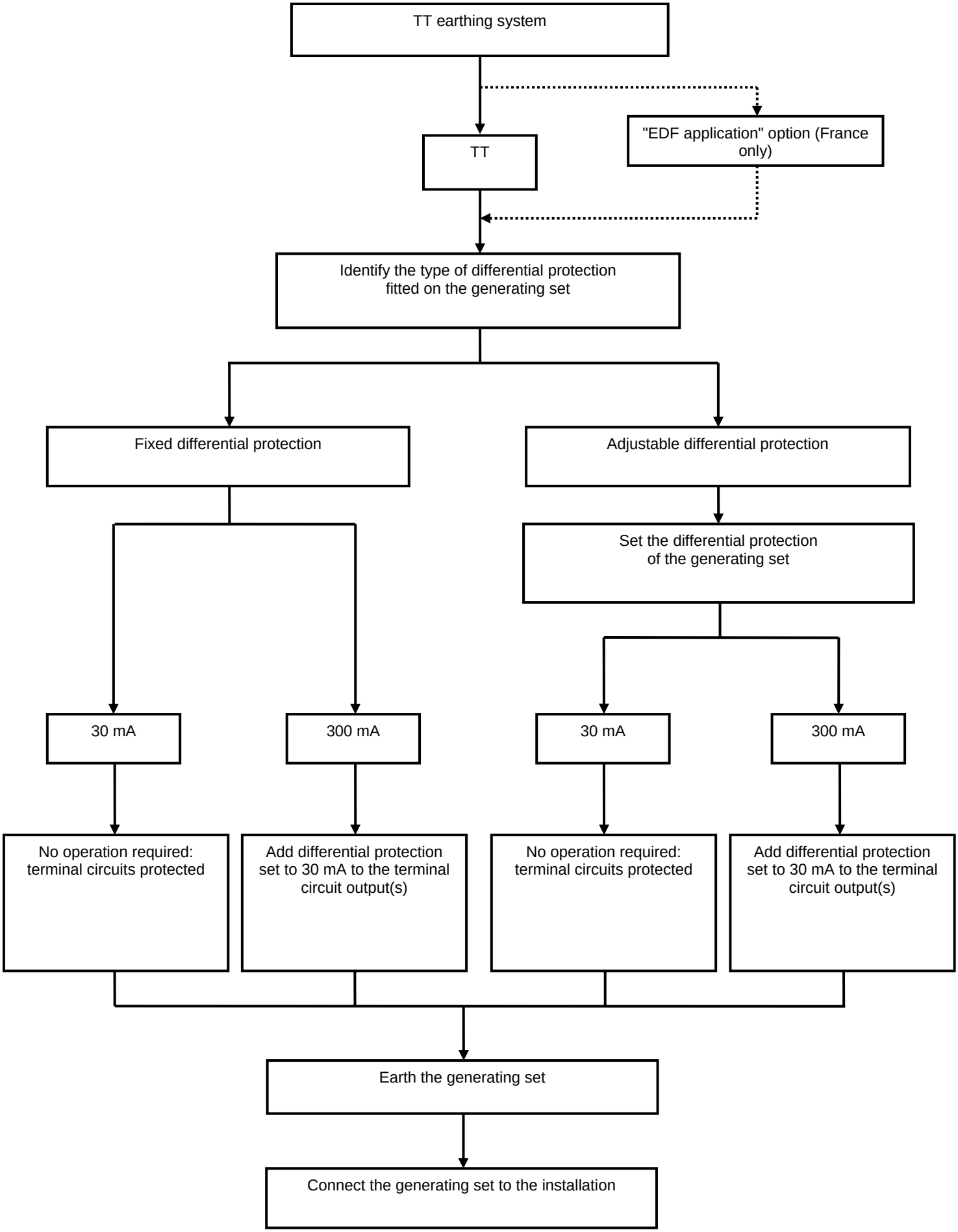

4.2.2 Protecting people and equipment

4.2.2.1. Earthing system principle

The **Earthing system**, or **SLT** (formerly **Neutral system**) of the electrical installation defines the situation of the generating set neutral in relation to earth and the grounds of the electrical installation at the user end.

Our generating sets are designed to operate with the TT system (or EDF application depending on the option, for France only).

4.2.2.2. TT system

In the TT earthing system, automatic power cut-off via a Residual Current Device (RCD) is obligatory at the upstream part of the installation, to ensure that personnel are protected (additionally, a maximum 30 mA device must be installed on outlet circuits).

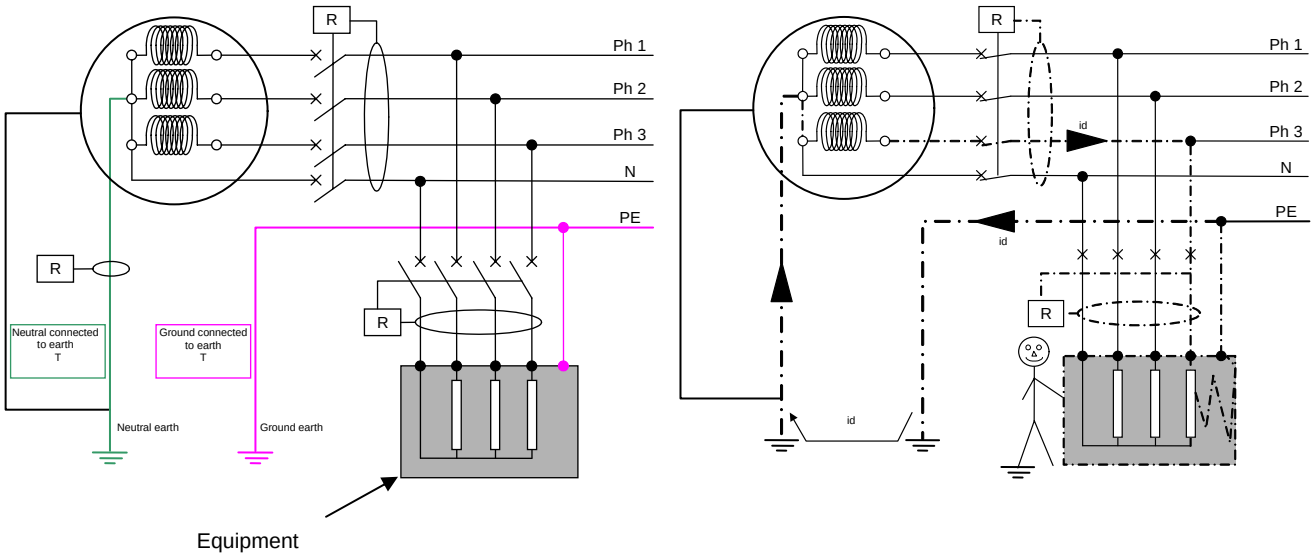

Figure 15 : TT earthing system

The alternator neutral is earthed, the grounds of the user equipment have their own earth connection.

4.2.2.3. Installing the differential protection

The generating set is equipped with a residual current device in order to guarantee individuals are protected from electric shocks with the TT system. This may be fixed ("vigi" unit) or adjustable (Resys) depending on the option chosen.

- If the generating set's residual current device is fixed and the activation threshold is set to 30 mA, it is guaranteed to protect people.

- If the generating set's residual current device is fixed and the activation threshold has been set at 300 mA, a 30mA residual current device must be added to each of the circuit outlets in use.

- If the generating set's residual current device is adjustable, (located upstream) this must be above those devices located downstream (terminal circuits); this means that continuity on clean circuits will be maintained in the event of a fault on one of the terminal circuits (see the following point on setting the residual current device).

Example:

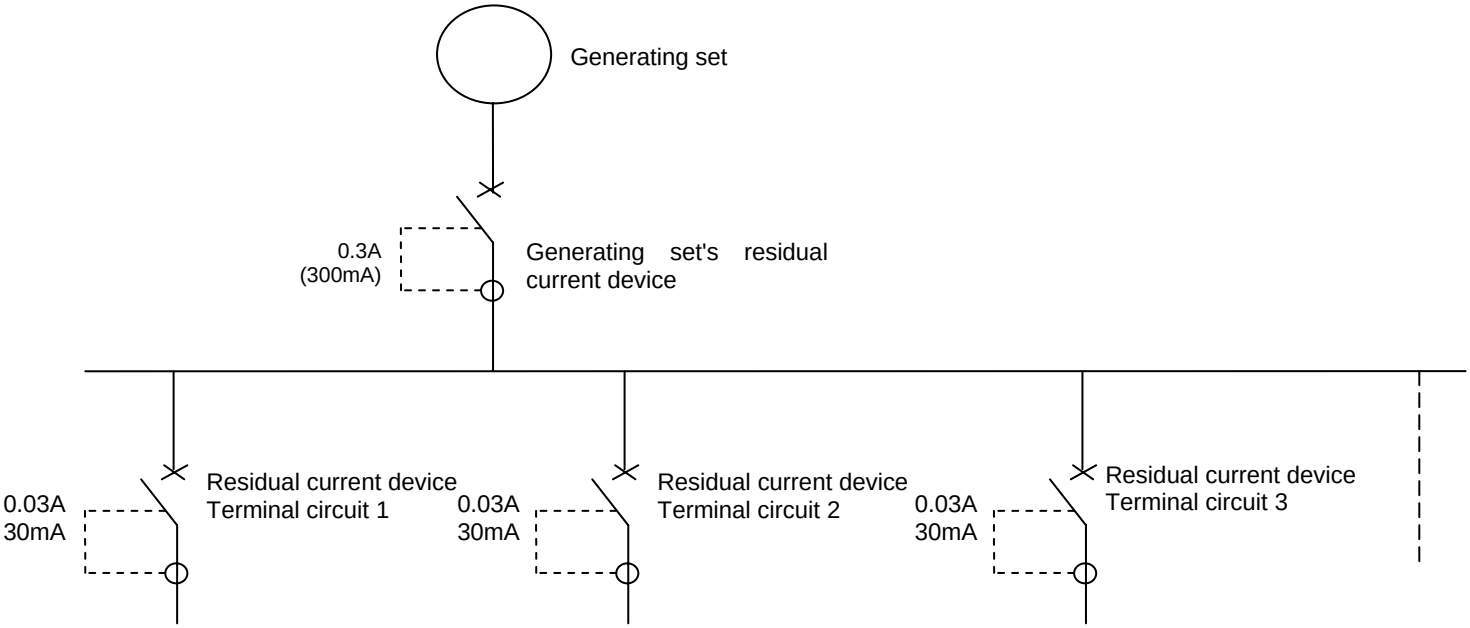

⚠	**Risk of electric shock**. The generating set's differential relay is factory-set with a current threshold of 0.03 A (30 mA) and with an automatic time delay (0 s). Any change to the setting on the residual current device could pose a risk to personal safety. The user will be held liable - any changes must only be made by trained, qualified engineers. If the setting is modified, it is essential to restore the original settings after use.

4.2.2.4. Setting the generating set differential protection

The setting of the generating set's residual current device is guaranteed by a differential relay fitted near the control unit (type A / AC or B depending on the generating sets). As a result, two parameters relating to the downstream device (terminal circuit) must be set:

- Current threshold: the generating set's differential relay must be three times more sensitive than that of the terminal circuit.
- Time delay: the cut-off of the generating set's differential relay must be longer than that of the terminal circuit.

- **Type A / AC differential relay**:

➢ Use:
Differential relay for which operation is guaranteed:

- for residual sinusoidal alternating currents;
- for continuous pulsed residual currents;
- for continuous pulsed residual currents with a continuous component of 0.006 A with or without phase check, independent of the polarity.

➢ Setting:

1. Use a screwdriver to set the current threshold potentiometer (1) to 0.03 A (30 mA).
2. Use a screwdriver to set the time delay potentiometer (2) to 0s (automatic).
3. Test the residual current device using the "Test" button on the relay (3).

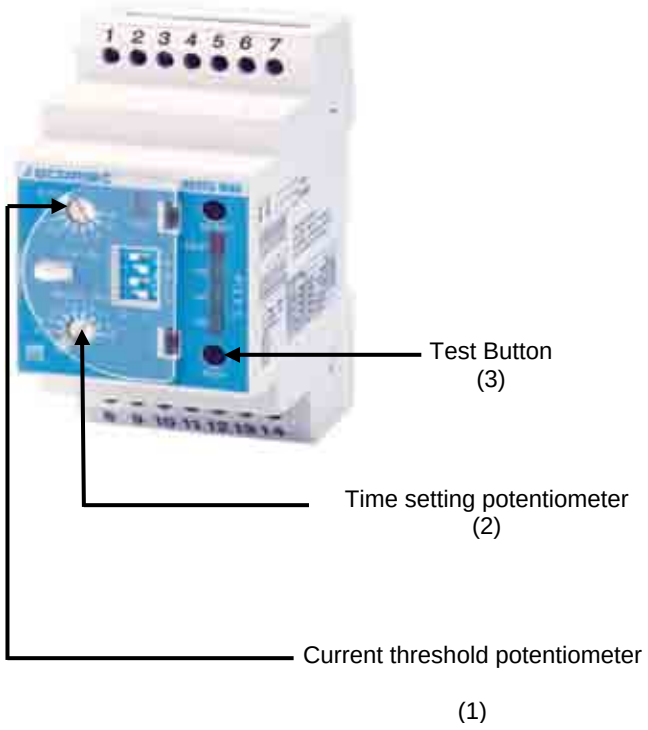

- **Type B differential relay:**
  - Use:
    Differential relay for which operation is guaranteed:
    - as in the case of type A;
    - for residual sinusoidal currents up to 1000 Hz;
    - for residual sinusoidal currents superimposed on a pure continuous current;
    - for continuous pulsed currents superimposed on a pure continuous current;
    - for residual currents which could come from rectifier circuits i.e.:- three phase half-wave rectifier or a three-phase full-wave bridge rectifier, full-wave bridge rectifier between phases, with or without phase angle check, independent of the polarity.

  - Setting:

1. Use a screwdriver to adjust the current threshold using the setting potentiometer (1) and the micro-switches (4) to 0.03 A (30 mA).
2. Use a screwdriver to adjust the time delay using the setting potentiometer (2) and the micro-switches (4) to 0s (automatic).
3. Test the residual current device using the "Test" button on the relay.

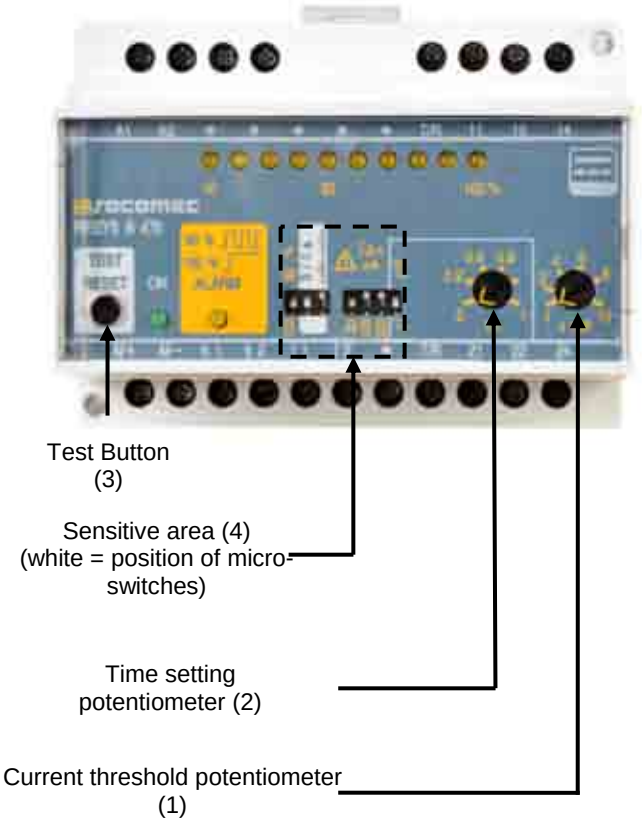

DANGER	**Risk of electric shock**. The generating set's differential relay is factory-set with a current threshold of 0.03 A (30 mA) and with an automatic time delay (0 s). Any change to the setting on the residual current device could pose a risk to personal safety. The user will be held liable - any changes must only be made by trained, qualified engineers. If the setting is modified, it is essential to restore the original settings after use.

4.2.2.5. Earthing the generating set

⚠ DANGER	**RISK OF ELECTRIC SHOCK.** **Before use, the generating set must always be earthed. Protection against electric shocks is only effective once the earthing connection has been made.** **Disconnect the battery leads, starting with the negative lead (-), or use the battery isolating switch before carrying out any operations on the generating set.**

1. Open the access door to the cable router flap and to the connection terminal box (no.1).

2. Connect the earth cable (supplied) to the terminal (no.2) on the generating set located on the connection terminal box.

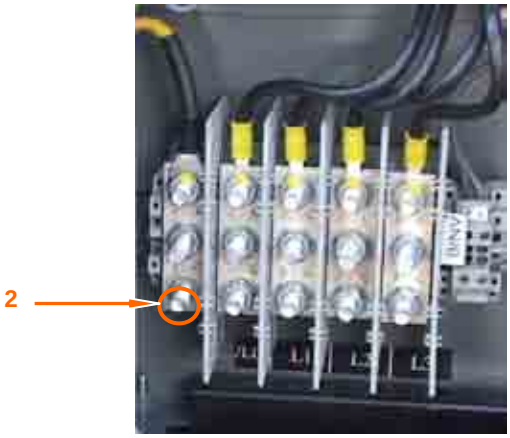

3. Check the length of the earthing rod depending on the nature of the ground and adapt if necessary.

! IMPORTANT	The equipment supplied is not suitable for bare stony soils, dry sand or impermeable rock.

Nature of ground	Length of earthing rod (in metres)
Thick arable land, damp compact backfill	1
Thin arable land, gravel, rough backfill	1
Bare stony soils, dry sand, impermeable rock	4 or 4 x 1

4. Plant the earthing rod in the ground and connect it to the earth cable.

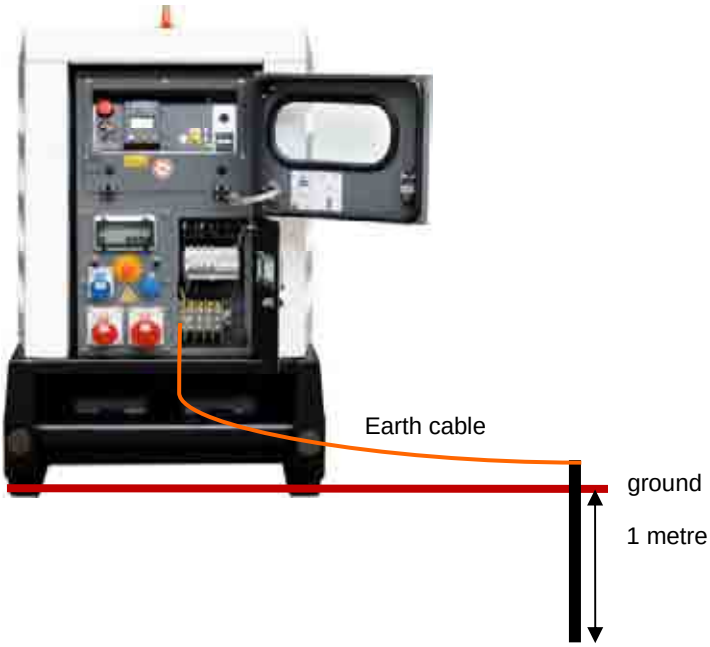

Note: For the United States (National Electrical Code ref. NFPA-70), use a copper wire with a minimum cross-section of 13.3 mm² (or AWG 6 at most) connected to the generating set's earth connection and a galvanised steel earthing rod completely buried in the ground in an upright position. This earthing rod must be at least 2.5 m long (of which at least 1 m must be in the ground).

4.2.3 Making the connections

4.2.3.1. Connections - general information

When connecting, always comply with standard NFC 15-100 and the application guide NFC 15-401 (in France) or follow standards based on the international standard IEC 60364 (countries outside France).
The cable cross-section and number of connection cables should be determined according to the type of connection cable and the current standards to be observed in the country of installation. The choice of connection cables must comply with international standard IEC 60364-5-52.

4.2.3.2. Selecting the power cables

The calculation rules used to choose the power connection cable size are defined below:

- Identify the current shown on the generating set's identification plate.
- From the table below, select the circuit breaker rating directly above the current shown on the generating set's identification plate.
- Choose the corresponding cable size.

.

Three-phase
Permitted drop in voltage = 5% / Multi-core conductors or connected single-core conductors where rating = 4X…(1) / Cable type PVC 70°C (e.g. H07RNF) / Ambient temperature = 30°C.

Circuit breaker rating (A)	Cable sizes		
	0 - 50m	51 - 100m	101 - 150m
	mm²/AWG*	mm²/AWG*	mm²/AWG*
10	1.5 / 14	2.5 / 12	4 / 10
16	2.5 / 12	4 / 10	6 / 9
20	2.5 / 12	4 / 10	6 / 9
25	4 / 10	6 / 9	10 / 7
32	6 / 9	6 / 9	10 / 7
40	10 / 7	10 / 7	16 / 5
50	10 / 7	10 / 7	16 / 5
63	16 / 5	16 / 5	25 / 3
80	25 / 3	25 / 3	35 / 2
100	35 / 2	35 / 2	4X(1X50) / 0
125	(1) 4X(1X50) / 0	4X(1X50) / 0	4X(1X70) / 2/0
160	(1) 4X(1X70) / 2/0	4X(1X70) / 2/0	4X(1X95) / 4/0
250	(1) 4X(1X95) / 4/0	4X(1X150) / 2350MCM	4X(1X150) / 2350MCM
400	(1) 4X(1X185) / 0400MCM	4X(1X185) / 0400MCM	4X(1X185) / 0400MCM
630	(1) 4X(2X1X150) / 2x 2350MCM	4X(2X1X150) / 2x 2350MCM	4X(2X1X150) / 2x 2350MCM

Single phase
Permitted drop in voltage = 5% / Multi-core conductors / Cable type PVC 70°C (e.g. H07RNF) / Ambient temperature =30°C.

Circuit breaker rating (A)	Cable sizes		
	0 - 50m	51 - 100m	101 - 150m
	mm²/AWG*	mm²/AWG*	mm²/AWG*
10	4 / 10	10 / 7	10 / 7
16	6 / 9	10 / 7	16 / 5
20	10 / 7	16 / 5	25 / 3
25	10 / 7	16 / 5	25 / 3
32	10 / 7	25 / 3	35 / 2
40	16 / 5	35 / 2	50 / 0
50	16 / 5	35 / 2	50 / 0
63	25 / 3	50 / 0	70 / 2/0
80	35 / 2	50 / 0	95 / 4/0
100	35 / 2	70 / 2/0	95 / 4/0
125	50 / 0	95 / 4/0	120 / 2250MCM

** : AWG. American Wire Gauge, American standard for electrical cables.*

4.2.3.3. Connecting the generating set to the installation

⚠ DANGER	**RISK OF ELECTRIC SHOCK.** **Before use, the generating set must always be earthed. Protection against electric shocks is only effective once the earthing connection has been made.** **Disconnect the battery leads, starting with the negative lead (-), or use the battery isolating switch before carrying out any operations on the generating set.**

1. Open the access door to the power connection cable router flap and to the connection terminal box (no.1).

2. Loosen the two knobs (no.2) on either side of the power connection cable router flap then slide the flap (no.3) towards the outside of the generating set.

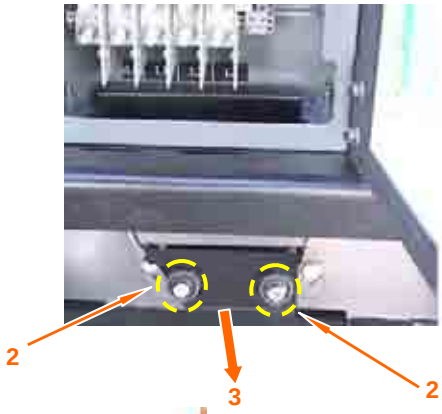

3. Feed the power connection cables through the cable router flap.

4. Connect the power connection cables onto the bars (N/L0-L1-L2-L3 or N2-R2-S2-T2) using the terminals (no.4).

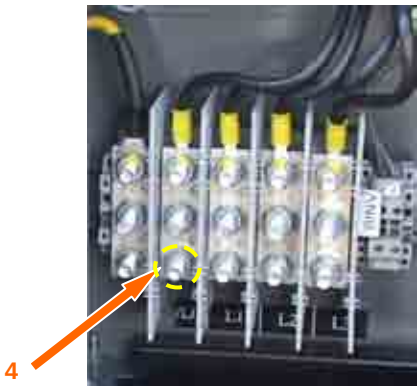

5. Slide the cable router flap towards the inside of the generating set until it makes contact with the power connection cables then retighten the two knobs; close the access door to the power section back up again.

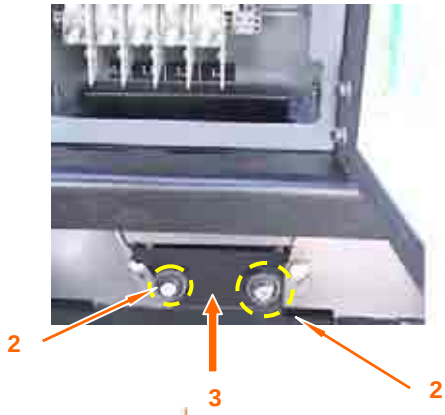

6. Connect the power connection cables to the installation to be powered ensuring the live and neutral wires are correctly connected.

! IMPORTANT	Our generating sets are factory-set with a conventional direction of phase rotation. A phase converter (not supplied) can be used to ensure correspondence of phases between the generating set and the installation..

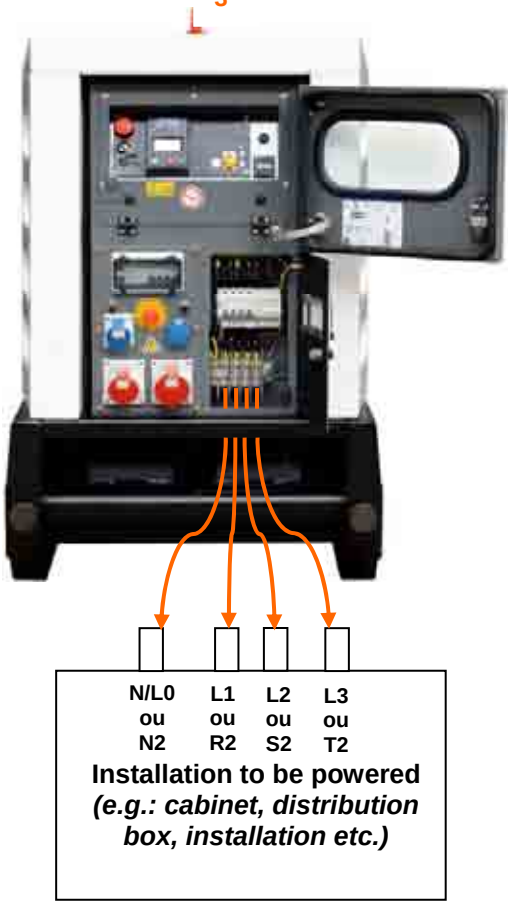

! IMPORTANT	To limit the risk of falls caused by obstacles on the floor, it is recommended to suspend cables and ventilation ducts. As necessary, ensure that cables which remain on the floor are protected by burying or covering them.

4.2.3.4. Connecting the battery or batteries to the generating set

! IMPORTANT	Always ensure that the polarities of the battery and starter motor correspond. Never swap the positive and negative battery terminals when connecting them. This could cause severe damage to the electrical equipment.

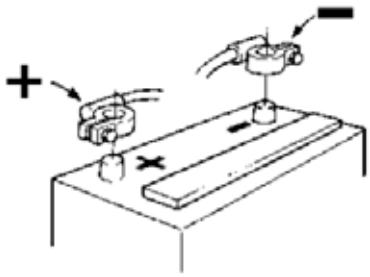

To connect the battery:
1. Connect the red connecting cable (+) to the positive battery terminal.
2. Then connect the black cable (-) to the negative battery terminal.

To disconnect the battery:
1. First disconnect the black cable (-)
2. Then disconnect the red cable (+).

4.2.4 Overvoltage

Generating sets are not equipped with devices that protect against voltage surges from atmospheric discharges or due to handling operations.

The company disclaims all liability for any accidents caused by these phenomena.

However, it is possible to install surge protectors considering that this assembly does not provide complete protection.

5. Installation

5.1. Warnings concerning commissioning

! IMPORTANT	The inspections referred to in this section enable the electrical generator set to operate. Specific skills are required to carry out these operations. **They must only be entrusted to personnel with the necessary skills.** **Failure to follow these instructions in any way could result in malfunction or very serious accidents**.

5.2. Checking the generating set installation

- Check the position of the generating set (stability, mounting, available space, ventilation, exhaust, etc.).
- Check the electrical connections :
  - earthing;
  - electrical control connections;
  - electrical power connections;
  - starter battery charging system (rating and voltage) if fitted to the generating set.

5.3. Preparing for operation of the generating set

- Become familiar with the controls useful to operate the generating set.
- Read and understand the "user" menus of the control unit.
- Become familiar with the maintenance plans for the generating set .
- Become familiar with the operation of the generating set at no load or under load.
- Become familiar with the fluid specifications (fuel, lubricant and coolant).

5.4. Checking the generating set before startup

- Check that the plugs, blanking covers and protective adhesive strips have been removed.
- Ensure that the anti-humidity bags have been removed from the electrical sections (cabinet or control console, alternator, etc.).
- Check the insulation of the alternator *see the alternator's maintenance manual.*
- Check the levels *see the engine's maintenance manual:*
  - coolant;
  - oil;
  - fuel.
- Open the oil filler tap (if fitted to the generating set).
- Check the starter battery or batteries (connecting and charge) *see the paragraph entitled "Starter batteries".*
- Check the starter battery charging system (if fitted to the generating set).

5.5. Checking the generating set after startup

<u>Off-load tests</u>

- Carry out the safety checks (emergency shutdown, oil pressure, coolant temperature, etc.).
- Check the mechanical parameters:
  - engine parameters (oil pressure, coolant temperature);
  - absence of abnormal vibrations;
  - absence of abnormal noises;
  - absence of leaks.
- Check the electrical parameters:
  - voltage, frequency, current;
  - rotating field.

<u>On-load tests</u>

- Check the mechanical parameters:
  - engine parameters (oil pressure, coolant temperature);
  - absence of abnormal vibrations;
  - absence of abnormal noises;
  - absence of leaks.
- Check the electrical parameters:
  - voltage, frequency, current;
  - rotating field.

6. Using the generator set

6.1. Pre-Start Inspection

- **Inspecting the engine compartment**

- Make sure there is no combustible material near the engine or battery. Also, check to make sure that the engine and battery are clean. If combustible materials or dust are found near the engine or battery, remove them.
- Check the electrical wiring for such components as the starter and alternator for looseness
- Check the entire engine for fuel leakage, engine oil or coolant. If leakages are found, repair.
- Make sure the following valves, plugs and cocks are open or closed (tightened) properly:
  - ✓ Fuel feed valve: Open
  - ✓ Coolant drain cock (plug): Closed (Tightened)
  - ✓ Oil drain valve: Closed

- **Checking the engine oil level**

⚠ Important	- **Do not** top up the oil if the oil level is not **below** the low level marker. - **Do not** exceed the hatched area The oil level is correct if it is within the hatched area.

❶ Pull out the oil level gauge and wipe it clean using a waste cloth.

❷ Insert the oil level gauge fully into the oil level gauge guide, then pull out the gauge again.

❸ The proper oil level is between the high and low marks on the oil level gauge. If the oil level is low, add engine oil.

❹ Install the oil filler cap after refilling.

❺ Check the oil pan and other area for oil leakage.

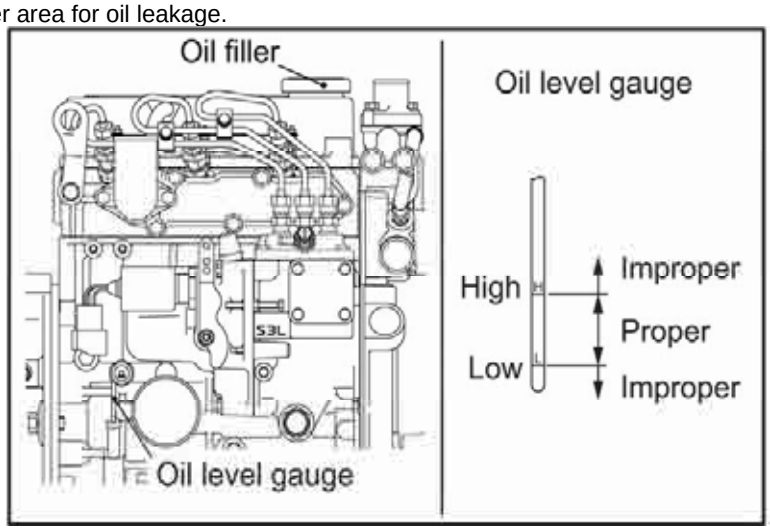

- **Checking the coolant level**

Warning	Remove the radiator filler cap only after the engine has cooled to room temperature. Place a waste cloth over the cap, and loosen the cap about a half-turn or stand the lever to the upright position to release internal pressure. Never open the radiator filler cap while the engine is hot, otherwise the steam or hot coolant spurts out and you may be scald with it.

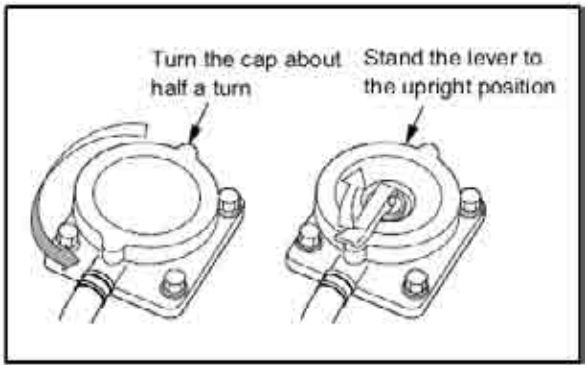

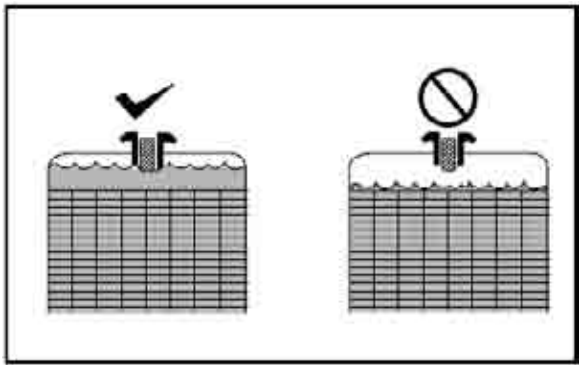

❶ Open the radiator filler cap and check the coolant level.
❷ If the coolant level is low, add coolant to the speci-fied level.
❸ Check for leaks in the cooling circuit.

- **Checking the air filter**

Important	A clogged filter element limits the engine's air intake and a reduced air supply to the engine.

If the air filter is fitted with a dust control valve (A), press the tip of the valve to evacuate any accumulated dust particles.

Check the air filter clogging indicator (B). If the indicator is red, clean the air filter.

- **Checking the fuel filters**

⚠ **Danger**	**When handling fuel, make sure there are no open flames or other fire hazards near the engine. Wipe off any spilled fuel completely.Spilled fuel can ignite and cause a fire.** **The fuel prefilter draining should be performed when the engine is cold and stopped.**

Check the absence of water or sediments in the sediment bowl (A) of the prefilter. If necessary, drain by implementing the following procedure:

❶ Unscrew the draining tap (B) at the bottom of the prefilter by rotating two or three turns.

❷ Collect the water and/or the sediments in a suitable receptacle.

❸ When fuel starts flowing, screw and tighten the draining tap.

❹ Check the absence of leak.

❺ If necessary, fetch the fuel system again.

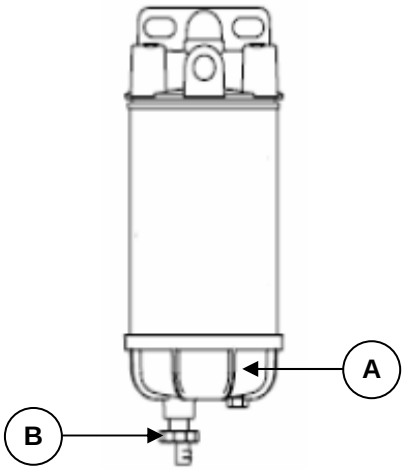

6.2. Generator set with NEXYS control panel

6.2.1 Control panel presentation

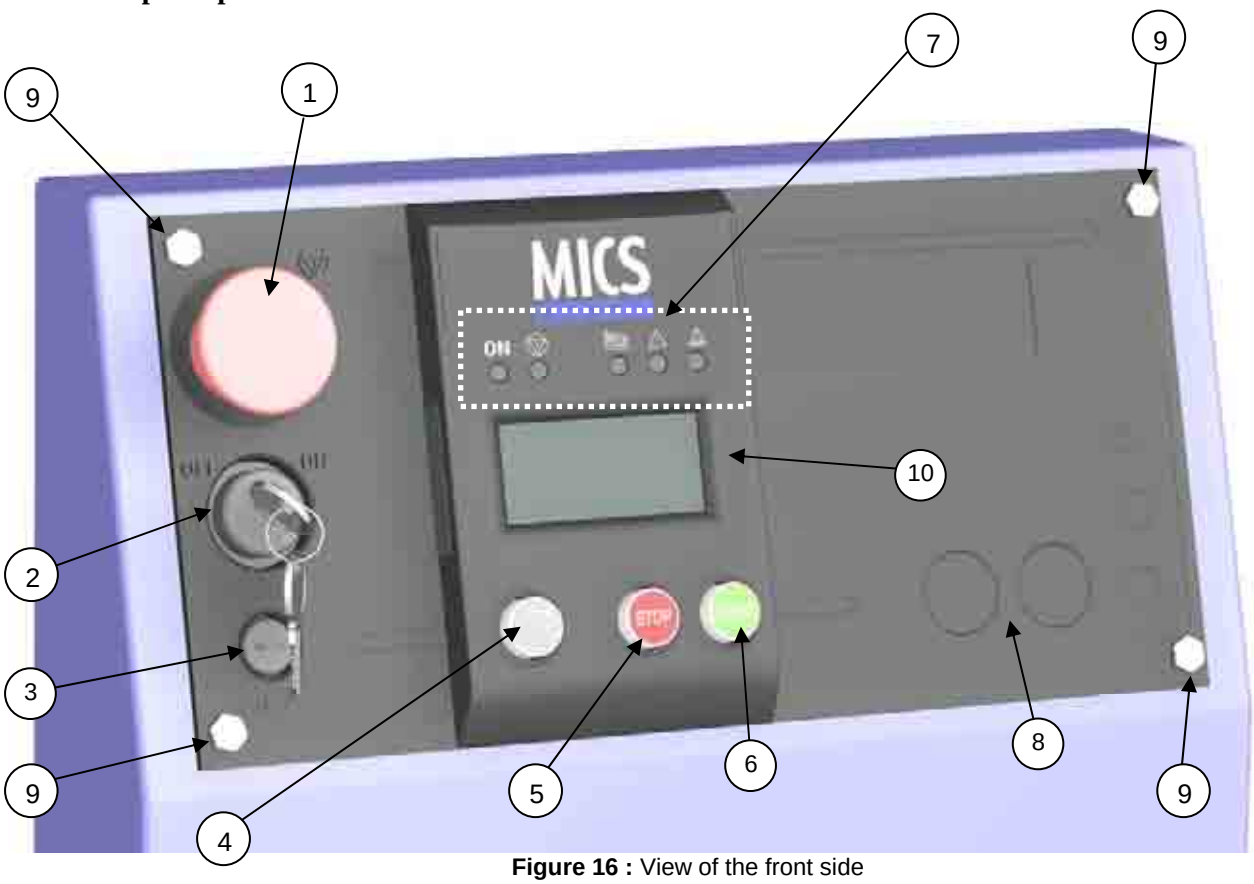

Figure 16 : View of the front side

① Emergency stop button for switching off the generating set in the event of a fault which could endanger personnel or damage equipment

② Key switch for starting up/shutting down the module and RESET function

③ Electronic card protection fuse

④ Screen-scroll button, press successively to access the various screens which are available

⑤ STOP button, press to switch off the generating set

⑥ START button, press to switch on the generating set

⑦ Normal operation LEDs and alarm and fault warning LEDs

⑧ Slot reserved for panel fascia options

⑨ Mounting bolt.

⑩ LCD for displaying alarms and faults, operating states, electrical and mechanical quantities

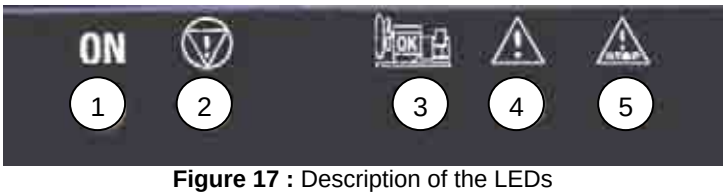

Figure 17 : Description of the LEDs

A lit LED indicates:

① Module being supplied (green, lights up and remains lit)
② Emergency stop activated (control panel or external emergency stop) (red, lights up and remains lit)
③ Visualisation of starting phase and speed/voltage stabilisation (flashing) and generating set operating OK or set ready to generate (green, lights up and remains lit)
④ General alarm (orange, flashing)
⑤ General fault (red, flashing).

6.2.1.1. Introduction to pictograms

The pictograms are as follows:

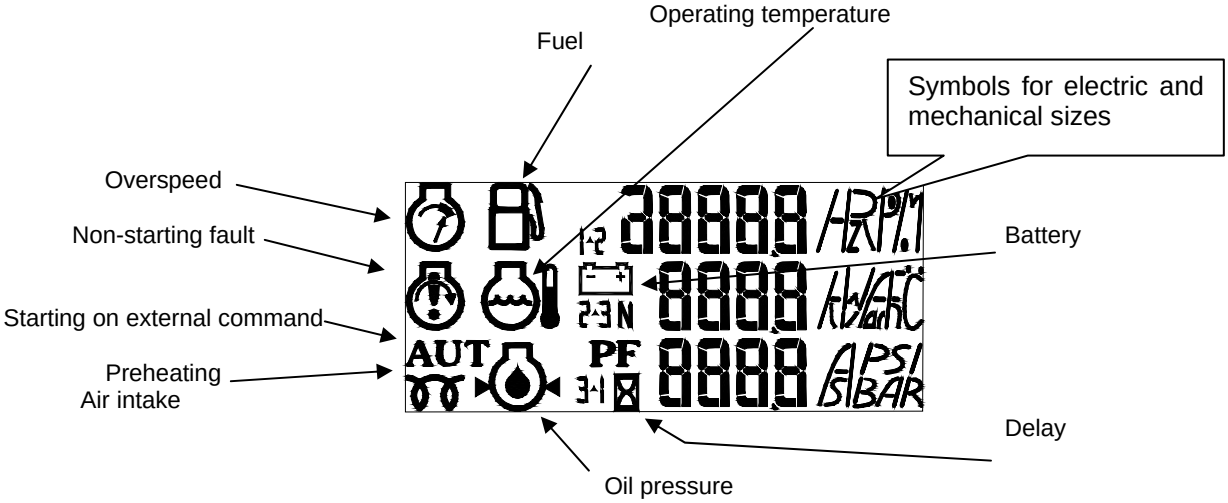

Figure 18 : View of pictograms

- The "fuel level" pictogram is used to display the fault, the alarm and the fuel level.
- The "operating temperature" and "oil pressure" pictograms are used to display the fault and analog value
- The "overspeed" and "non-starting fault" pictograms are used to display the fault.
- The "battery" pictogram is used to display the "alternator charge" fault and to indicate the battery voltage.

6.2.2 Manual starting

⚠ Danger	Check that the generating set circuit breaker has triggered.

❶ connect the generating set battery.
❷ turn the key switch to the ON position (without forcing it)

- ✓ All of the LEDs light up for 2 seconds, to confirm that they are operating correctly.
- ✓ If the LEDs do not light up, check the protection fuse and replace it if necessary.
- ✓ All the items on the screen are displayed for 2 seconds.
- ✓ Only the "ON" LED remains lit to indicate that the module is powered up.
- ✓ The following screen appears.

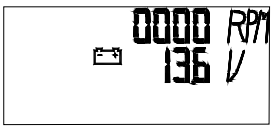

The first line displays the motor speed in RPM.
The second line displays the battery voltage in volts (V).

- ✓ Check the battery voltage (min. 12 V)

❸ Press (once briefly) the green "START" button.

- ✓ If the motor is equipped with an air preheating system, there is a 10-second delay before the motor starts (preheating activation period).
- ✓ The following screen appears

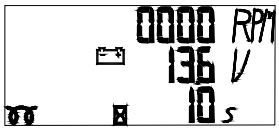

The third line displays the air preheating time remaining (with pictograms representing a resistor and an hourglass).

- ✓ If the motor is not fitted with an air preheating system or once the preheating delay has elapsed, the engine starts up (start of a cycle comprising 3 attempts to start up the engine).
- ✓ The following screen appears.

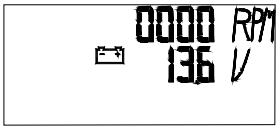

⚠ Warning	The number of successive and automatic starting attempts is limited to 3.

Note: the LED flashes as soon as the START button is pressed and continues to flash until the frequency stabilises if a "measurements" card has not been inserted and until the frequency and voltage stabilise if a "measurements" card has been inserted.

Following stabilisation, the LED light comes on continuously.

6.2.3 Switching off

❶ trigger the circuit breaker located at the base of the centre console
❷ Let the motor run under no load for 1 to 2 minutes to allow it to cool.
❸ press the "STOP" button to stop the generating set.
❹ switch off the MICS Nexys module by switching the key to "OFF" (without forcing it).

6.2.4 Alarms and faults

The appearance of a fault or an alarm causes the following screen to be displayed (one or more pictograms or a fault code along with the SOS message are displayed).

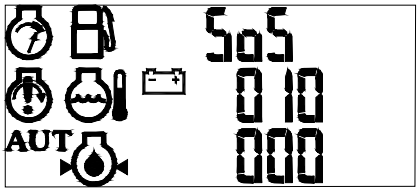

The user can access the following screens by pressing the key

The fault or alarm screen will disappear once the fault or alarm has been removed.
Only one fault is displayed on this screen (the fault which caused the generating set to stop).
If one or more faults have appeared after the first fault, they can only be displayed after the first fault has been reset (press "Reset" as many times as the number of faults present).
Note: an alarm can appear at the same time as a fault.

6.2.5 Faults and alarms - Details

List of faults which will cause the generating set to stop and generate a pictogram

Oil pressure fault: Indicates that the oil pressure is incorrect	Associated pictogram 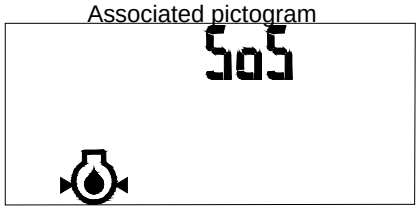
Engine temperature fault: Indicates that the engine temperature is too high.	Associated pictogram 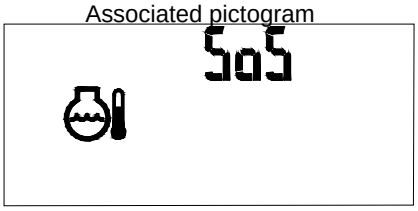
Non-starting fault: Indicates that there have been three consecutive unsuccessful starting attempts.	Associated pictogram 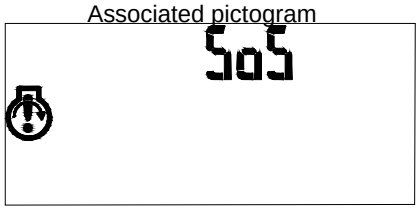
Overspeed fault: Indicates an excessive generating set running speed.	Associated pictogram 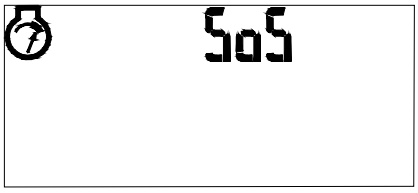
Low fuel level fault: Indicates the need to top up the fuel.	Associated pictogram

List of faults which will cause the generating set to stop and generate a fault code

Low coolant level fault: indicates that the level of coolant is low in the radiator (linked to a two second time delay). Or Overload or short-circuit fault (optional): with the circuit breaker SD contact closing (overload or short-circuit), the generating set switches off immediately also causing the main circuit breaker to be triggered.	Associated message SoS 100 000
Additional fault linked to message opposite: is displayed in the following two cases: ➢ Differential fault (1) ➢ insulation fault (2) (1) Differential fault (optional): with a differential fault causing the activation of the differential relay, the generating set stops immediately also causing the main circuit breaker to be tripped. (2) Insulation fault (optional): with an insulation fault causing the activation of the control unit performing insulation, the generating set stops immediately.	Associated message SoS 010 000
Underspeed fault: indicates an incorrect rotation speed (below 1000 rpm).	Associated message SoS 001 000
Emergency stop or external emergency stop fault	Associated message SoS 000 001
"STOP" fault activated if the "STOP" button is pressed whilst the "AUT" LED is flashing to indicate that the generating set is operating in automatic mode.	Associated message SoS 000 010

List of alarms associated with a pictogram

Low fuel level alarm: Indicates the need to fill up with fuel.	Associated pictogram SoS
"Alternator charging fault" alarm indicates a problem affecting the alternator charging rate.	Associated pictogram SoS

6.2.6 MURPHY diagnostic module

The fault finding module (MDDM) is an indicator for analysis and fault finding designed and manufactured for reading information available on the J1939 CAN Bus. The fault finding module is easy to use and will enable you to view the values of the various engine parameters and engine operating status codes.
It shows two lines, each of 8 characters, on a backlit LCD display. Two scroll buttons enable you to navigate in the menus and parameters. Two LEDs, one red and one orange, indicate the fault or alarm status of the engine or ECU.

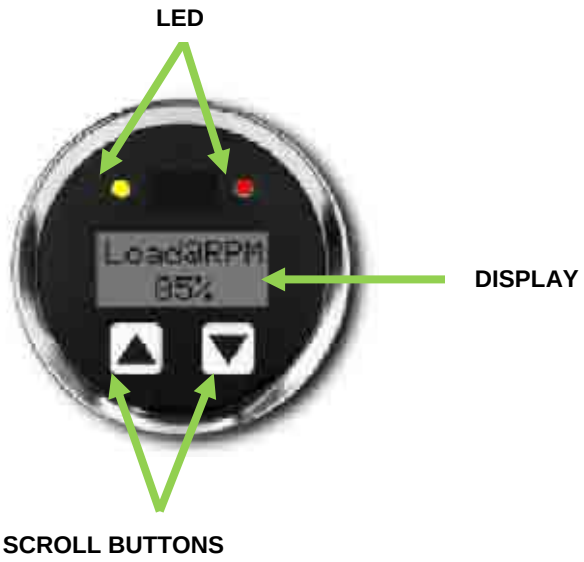

A- Machine Parameters

The following parameters are available on the Murphy fault finding module:
- working hours counter
- engine speed
- battery voltage
- engine speed
- coolant temperature
- oil pressure
- fuel economy
- air manifold temperature
- actual consumption
- active status codes
- status codes recorded coming from the engine
- MDDM20 parameter configuration for display
- display of the engine configuration parameters
-etc. depending on the type of engine.

B-Use

The Murphy module (MDDM) offers simple menu navigation:

1.To browse the list of parameters, press the Up and Down buttons.

2.To enter or exit a sub-menu, press both arrows simultaneously.

The following diagram shows the structure of the main menu and how to go to each parameter:

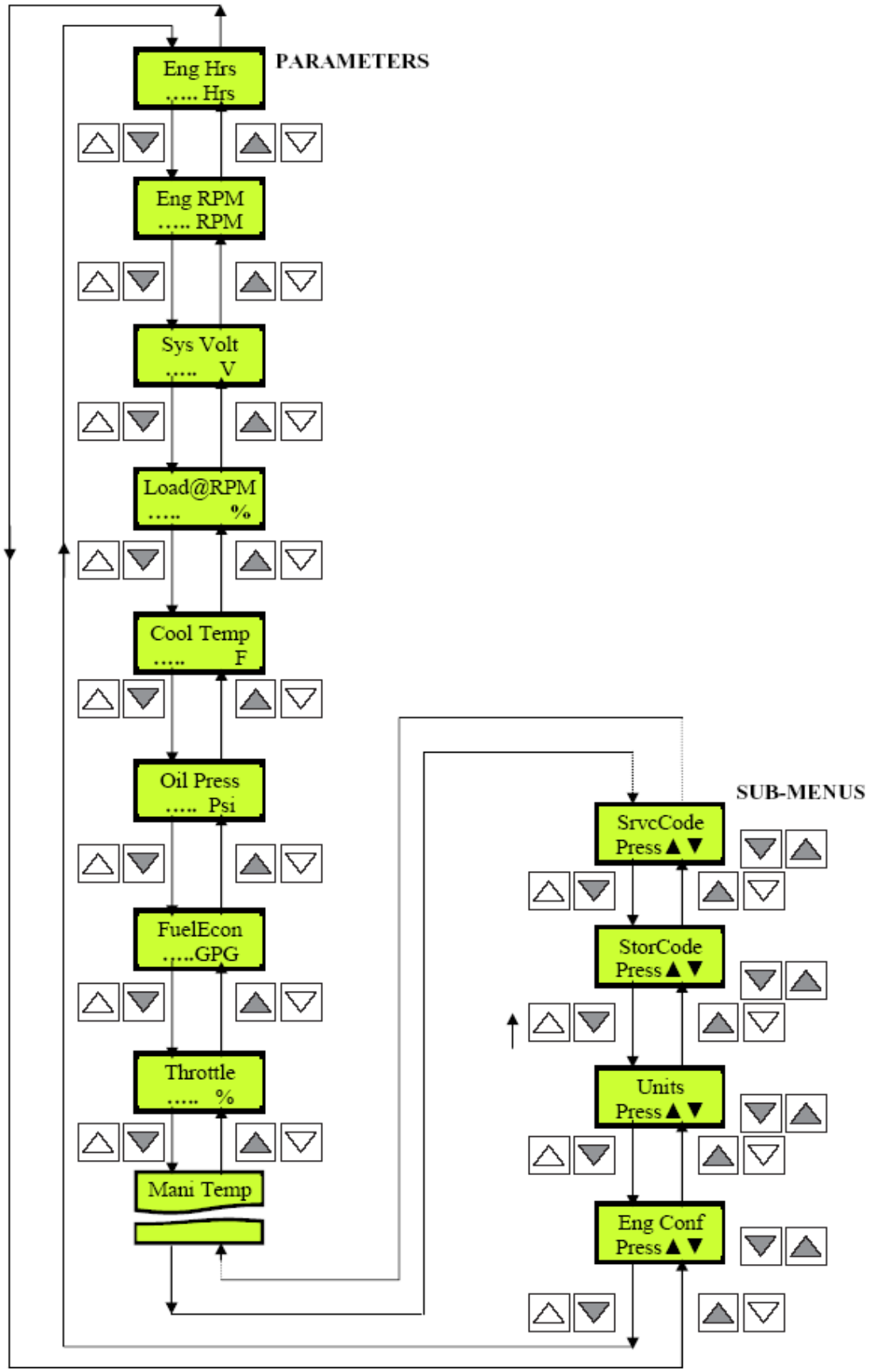

The Parameter menu: to navigate in this menu simply use the arrow buttons separately.

The sub-menus: The sub-menus are available at the end of the parameter menu. To go to these sub-menus, scroll through the parameters using the ▲ and ▼ buttons until you reach the required sub-menu.

C- <u>The Sub-menus.</u>

The sub-menus enable certain aspects of the fault finding module display to be modified.

<u>Changing the unit of measurement:</u>
There are two display modes available for units: English or metric. To change your units of measurement, use the ▲ and ▼ scroll buttons until you get to the sub-menu:

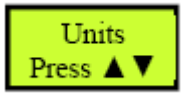

Press the ▲ and ▼ arrows simultaneously if you want to retain the current designation.

Press one of the scroll buttons to show the second mode for displaying units. If you want to retain the second display mode, confirm this by pressing the ▲ and ▼ buttons simultaneously.

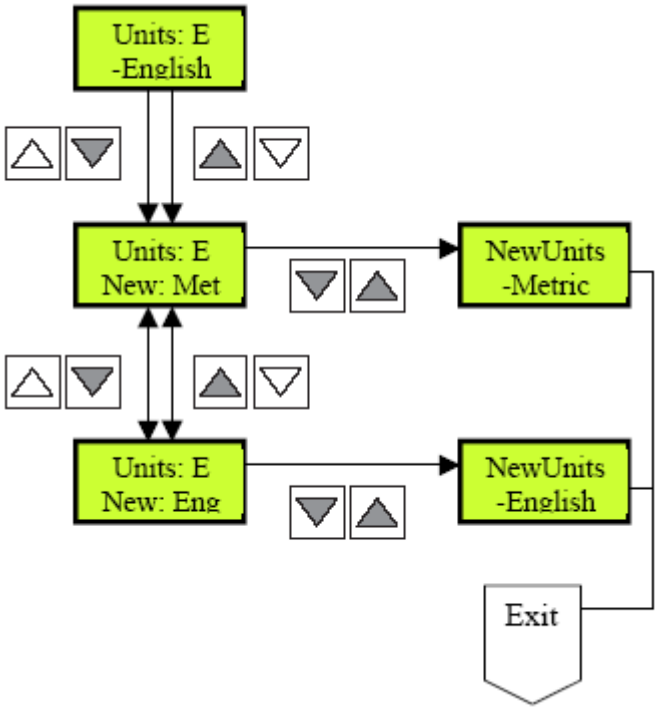

D-Displaying the active service codes:

The fault finding module enables the machine faults and alarms to be displayed in real time. When a fault appears, the display shows the message "SrvcCode" every five seconds between displaying the current parameters.

The orange LED will light up when an alarm code is displayed (engine does not stop), the red LED will light up when a fault code is displayed.
SPN and FMI codes are used in standard J1939 to identify faulty equipment
SPN: Suspect Parameter Number.
FMI: Failure Mode Indicator.

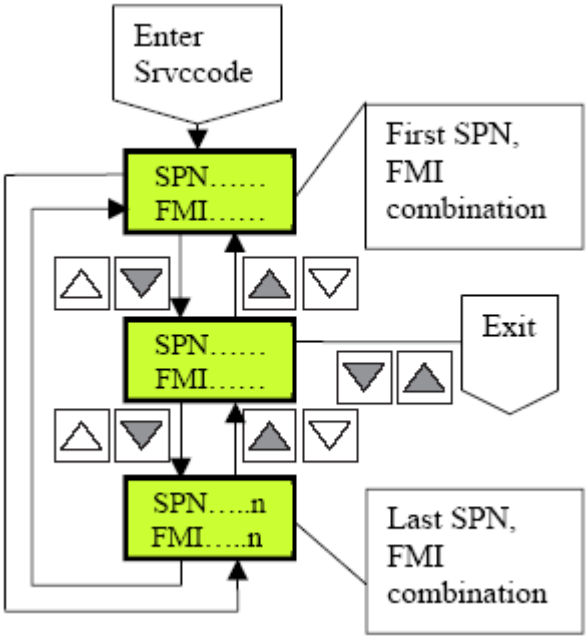

In the event that there are no active fault codes, the following screen will appear:

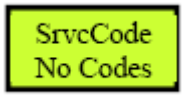

Depending on the SPN/FMI code, refer to the attached "List of engine fault codes" and "Engine user and maintenance manual" for help on fault finding and maintenance.
Note that the manufacturer documents do not always stipulate the SPN used, for example:
-Volvo uses a set of codes called PID (Parameter Identifier) or SID (System Identifier); these two names relate to standards J1587 or J1979, but in the case of VOLVO engines they relate to standard J1587. These two codes find their equivalent in standard J1939 (SPN). The attached "List of engine fault codes" indicates the SPN equivalent to Volvo's SID and PID.
- John DEERE complies with standard J1939 and uses SPN codes.

E-display of machine codes programmed:

The MDDM can display the codes of services programmed in the ECU memory. These programmed service codes are useful for generating set fault finding and maintenance.
To display the programmed codes, scroll through the parameters until you reach the following sub-menus:

In the event that there are no programmed codes to display, the following screen will appear:

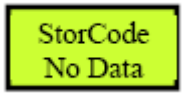

The purpose of programmed codes is to create a fault log, which is used to determine recurrent faults and thereby carry out effective corrective and preventive maintenance on the engine; also it not desirable to delete these when the generating set is in operation onsite. Note that at the test bench outlets the EEPROM memory, in which the programmed codes are stored, is reset to zero.
The following diagram shows the structure of the STORCODE (programmed code) menu and how to go to each parameter:

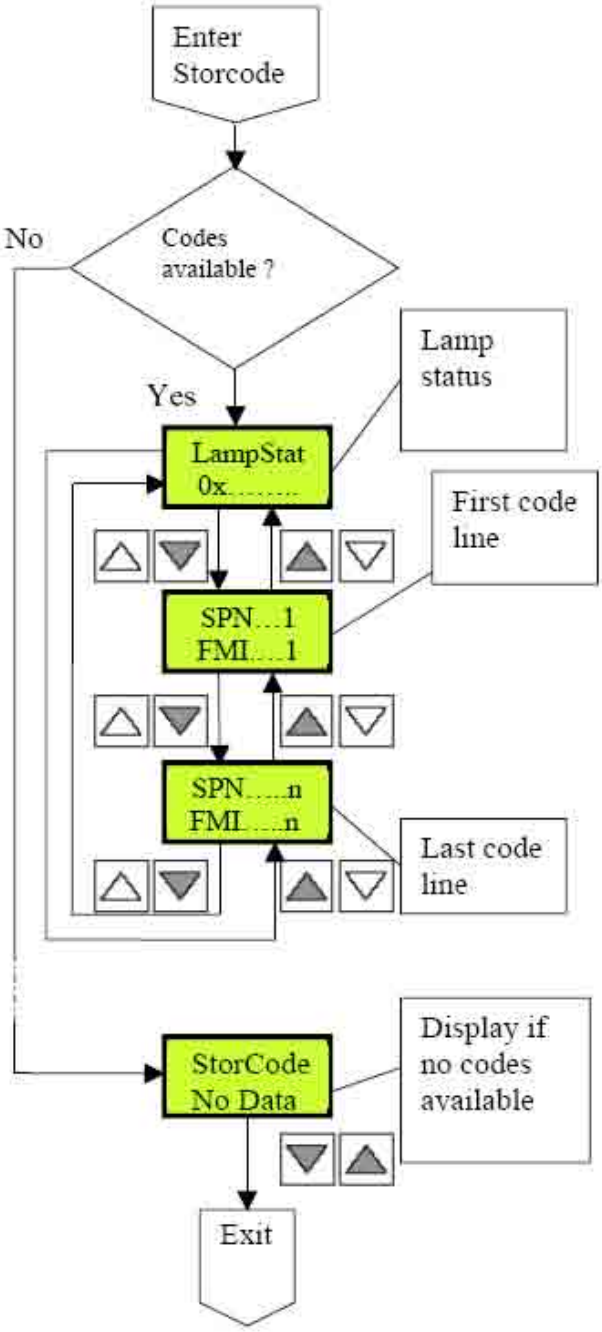

F)-Fault finding module internal errors.

Like any equipment using internal memory and a program, the fault finding module generates fault codes. Two types of code can be recognised:
- Address Claim Procedure Errors
- Run Time Bus Errors.

Address Claim Procedure Errors (ACP-Err):

The following fault codes relate to the switching on of the fault finding module.

Error Code 1:

ACP-Err
No Addr

When switched on, the fault finding module must issue a request to the ECU for the network addresses used in order to exploit them; this screen appears when:
- an address cannot be used.
- the fault finding module cannot find the default addresses.
- an address cannot be found in the correct register.

Error Code 2:

ACP-Err
Bus EP

Passive Bus Error: this code appears when:
- the fault finding module cannot detect the ECU: in this case the CAN Bus is open.
- the CAN_hi and CAN_lo run time bus connection is reversed between the source (ECU) and the fault finding module.

Error Code 3:

ACP-Err
BusError

This code is the result of the following problems:
- the CAN_Hi or CAN_lo bus, or both, are connected to an electrical ground or an external source of current.

- data is being not transmitted at a standard baud rate.

This type of fault generally requires repairs to be carried out on the CAN BUS connection and therefore involves work on the engine wiring harness, i.e. on the fault finding module extension.

Run Time Bus Errors:

Fault codes can only be active if the fault finding module has been able to obtain the network addresses when it was switched on, see Address Claim Procedure Errors (ACP-err).

Error Code 1:

xxxxx EP
No Data

EP=Passive Error, this screen appears when the fault finding module loses contact with the ECU, there may be two causes of this:
- one connector on the bus connection is disconnected.
- the CAN Bus is open.

Error Code 2:

xxxxx BO
No Data

BO=Bus Off, in this case, the case is identical to Error code 3 of the ACP.

Error Code 3:

xxxxx BR
No Data

BR=Bus Reset, this error code is similar to Error code 3 of the ACP, as are its causes. In this case the fault finding module has encountered problems on the CAN Bus and it tries to automatically re-establish the network connection.

6.3. Generator set with TELYS control panel

6.3.1 Control panel presentation

6.3.1.1. View of the front panel

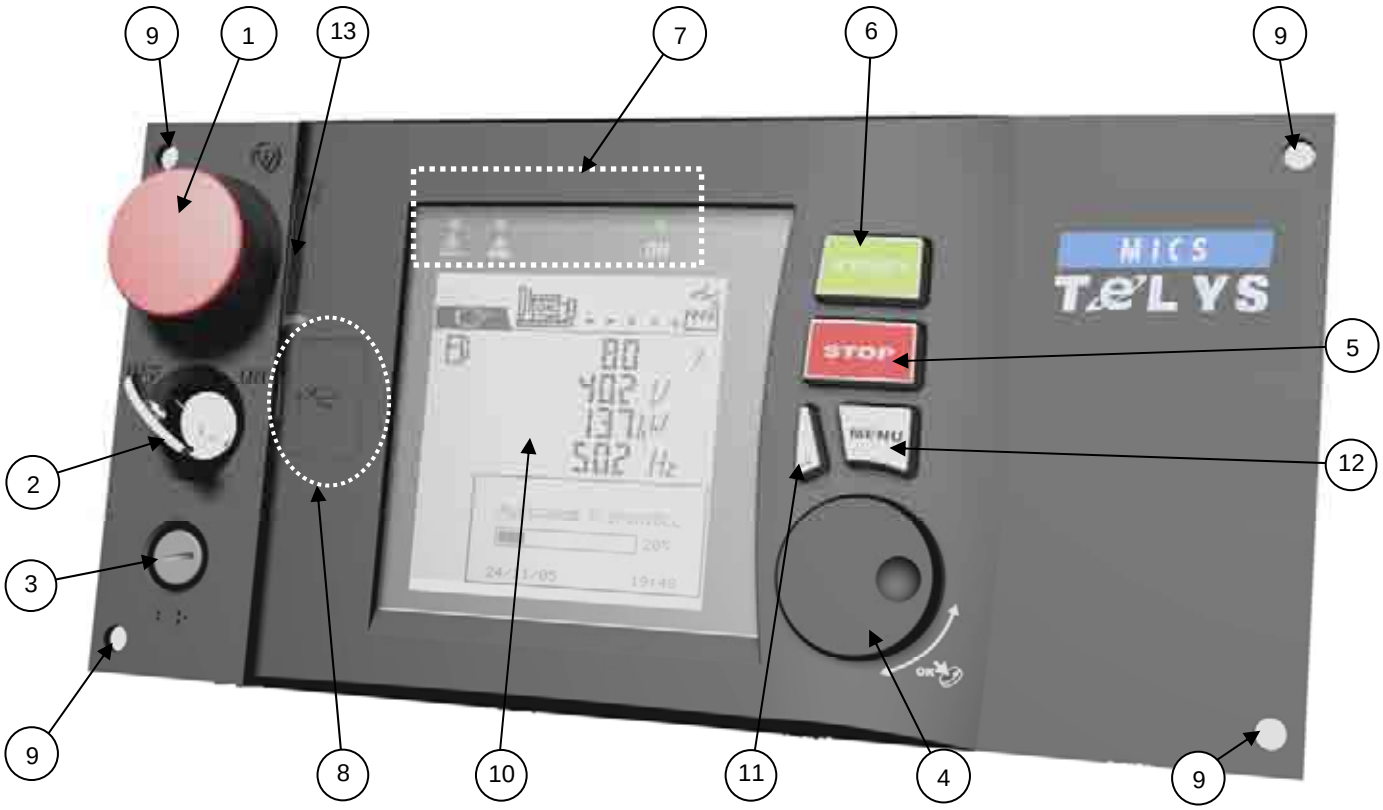

Figure 19 : View of the front panel

1 Emergency stop button (AU) for switching off the generating set in the event of a fault which could endanger personnel or damage equipment.
2 Key switch for switching the module on/off.
3 Electronic board protection fuse.
4 Scrolling and selection wheel for scrolling through the menus and screens and selecting items simply by pressing the wheel.
5 STOP button, press to switch off the generating set.
6 START button, press to switch on the generating set.
7 Power ON LEDs and alarm/fault warning LEDs.
8 Location of USB ports.
9 Mounting bolt.
10 LCD for displaying alarms and faults, operating statuses, electrical and mechanical quantities.
11 ESC button: for returning to the previous selection and for default RESET function.
12 MENU button for accessing the menus.
13 Lighting for the emergency stop button.

Figure 20 : Description of the LEDs

A lit LED indicates:

1 Alarm activated (flashing yellow).
2 Fault found (flashing red).
3 Module on (green, on continuously).

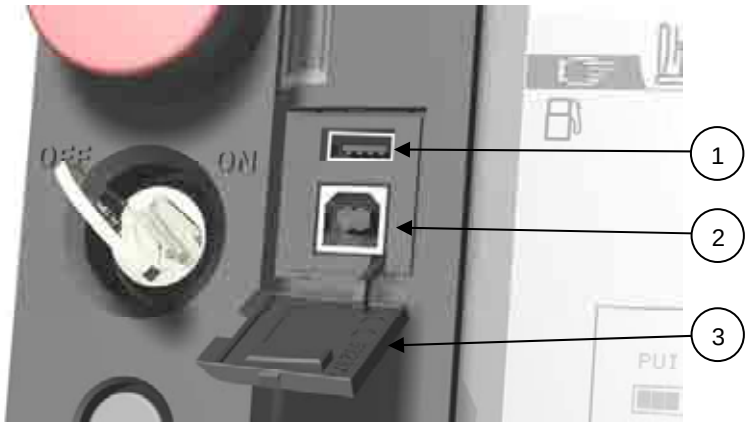

Figure 21 : Close-up of USB ports

1 USB key connection (HOST): file transfer between USB key and TELYS and vice versa.
2 Connection for microcomputer (DEVICE):
- file transfer between PC and TELYS and vice versa,
- main module power supply.

3 Protective cover.

6.3.1.2. Description of the screen

The screen is backlit and requires no contrast adjustments. This screen is divided into 4 zones.

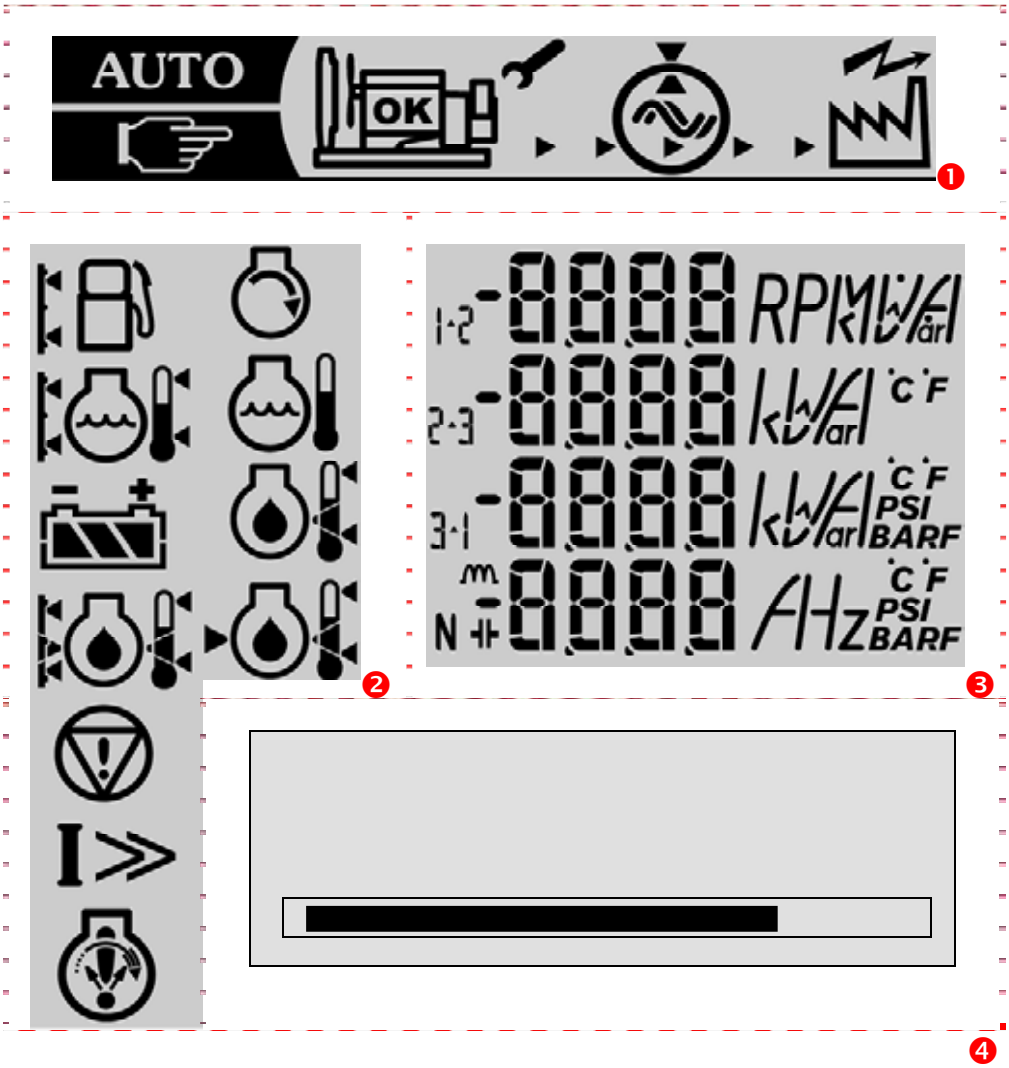

Figure 22 : Description of the screen (example)

1. Zone 1: in this zone, the status of the generating set is displayed
2. Zone 2: in this zone, pictograms relating to dimensions measured are displayed, as well as Alarm and Fault pictograms
3. Zone 3: in this zone, the measured values corresponding to the measured dimensions are displayed with the corresponding units of measurement
4. Zone 4: in this zone, messages relating to the control of the generating set and the menus are displayed.

Note: the information displayed on measurements, alarms and faults as well as messages and menus relating to control of the generating set will depend on the equipment level of each generating set. Certain screens may therefore not be present.

6.3.1.3. Description of the pictograms in zone 1

Zone 1 pictograms

Pictograms	Display	Activation conditions
"MAN" mode	Fixed	TELYS in manual mode (MAN)
	Flashing	For 5 seconds when switching from AUTO to MAN mode
"AUTO" mode	Fixed	TELYS in automatic mode (AUTO)
	Flashing	For 5 seconds when switching from MAN to AUTO mode
	Flashing	Genset starting
	Fixed	Genset started
	Fixed	Genset stabilised (voltage and frequency)
	Flashing (impression of constant movement from left to right)	The genset is generating and in use
	Fixed	Usage supplied
	Not used	
	Fixed	Synchronisation
	Flashing	
	Fixed	Genset synchronised or coupled

6.3.1.4. Description of the pictograms in zone 2

Alarm and fault pictograms in zone 2

All the pictograms in this zone are activated when TELYS is initialised.

Data displayed			
Fuel level indicator			
Alarm / Fault low fuel level	Alarm / Fault high fuel level		
Coolant level / temperature indicator			
Alarm Low level fault	High level fault alarm	Alarm High temperature fault	No preheating fault alarm
Battery			
Min battery voltage (flashing)	Max battery voltage (flashing)	Battery charge indicator (flashing bars)	
Oil pressure / temperature indicator			
Oil pressure Alarm / Fault	High or low oil level Alarm / Fault	High or low oil temperature Alarm / Fault	
Emergency stop			
Emergency stop fault			
Overload or short circuit			
Tripping of circuit breaker following an overload or short circuit			
Engine speed			
Underspeed fault	Overspeed fault	Non-starting fault	

6.3.1.5. Description of the pictograms in zone 3

Zone 3 pictograms

All the pictograms for these zones are activated when the TELYS is initialised. The pictograms below are shown for information only.

Generating set stopped

Screen No.	Pictograms	Data displayed
P1		Fuel Level Indication High-temperature (HT) coolant temperature indication (units as per settings menu) Battery Voltage indication Oil Temperature Indication (units as per settings menu)

Genset start-up or genset started or genset stoppage in progress

Screen No.	Pictograms	Data displayed
P2		Engine Speed Indication High-temperature (HT) coolant temperature indication (units as per settings menu) Oil Pressure Indication (units as per settings menu) Oil Temperature Indication (units as per settings menu)

Genset started

Screen No.	Pictograms	Data displayed
P3 Operation default screen	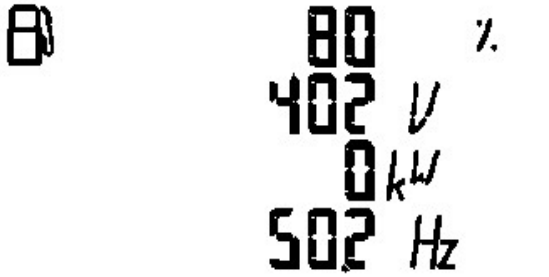	Fuel Level Indication Alternator Compound Voltage Indication Total Active Power Indication Alternator Frequency Indication
P4		Alternator U12 compound Voltage Indication Alternator U23 compound Voltage Indication Alternator U31 compound Voltage Indication Alternator Frequency Indication

Screen No.	Pictograms	Data displayed
P5	1 233 2 233 V 3 233 502 Hz	Alternator V1 single Voltage Indication Alternator V2 single Voltage Indication Alternator V3 single Voltage Indication Alternator Frequency Indication
P6	12 230 2 115 V 1 115 502 Hz	Alternator U12 compound Voltage Indication Alternator V2 single Voltage Indication Alternator V1 single Voltage Indication Alternator Frequency Indication
P7	230 V 0 A 502 Hz	Alternator V1 single Voltage Indication Alternator phase 1 Current Indication Alternator Frequency Indication
P8	1 0 2 0 A 3 0 N 0	Alternator phase 1 Current Indication Alternator phase 2 Current Indication Alternator phase 3 Current Indication Alternator Neutral Current Indication
P9	0 kW 0 kvar 0 kVA m 0.92 PF	Total Active Power Indication Total Reactive Power Indication Total Apparent Power Indication Total Output Factor Indication (inductive or capacitive)

Screen No.	Pictograms	Data displayed
P10		Fuel Level Indication Battery Voltage indication Battery Ammeter Indication
P11		Total Reactive Power Indication Alternator U12 compound Voltage Indication Total Active Power Indication Alternator Frequency Indication

Order of appearance of screens based on the type of network with the genset started.

	Type of line			
Order of appearance	**3P+N**	**3P**	**2P+N**	**1P+N**
1	P3 if genset started P11 if genset coupled	P3 if genset started P11 if genset coupled	P3 if genset started P11 if genset coupled	P3 if genset started P11 if genset coupled
2	P4	P4	P6	P7
3	P5	P8	P8	P9
4	P8	P9	P9	P2
5	P9	P2	P2	P10
6	P2	P10	P10	
7	P10			

The screen is changed using the scrolling and validation wheel.
When the wheel is turned clockwise, the screens scroll upwards and backwards.
The screens scroll in a loop.
Example: in a 3P+N network after screen 7, then screen 1 and in reverse.

6.3.1.6. Display of messages in zone 4

The graphic zone (zone 4) is used to display messages relating to the generating set's operation. These messages are as follows:

<u>Initialisation of the TELYS</u>

Screen No.	Screen	Data displayed
G 1	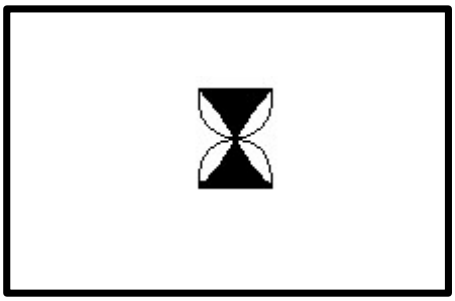	Initialisation of the TELYS when switching on and/or when loading a configuration
G 2	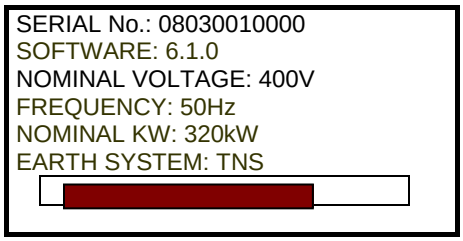	Generating set serial number TELYS software version Alternator nominal voltage Alternator nominal frequency Nominal active power Neutral speed Bar graph indicating the screen display time

Generating set stopped

Screen No.	Screen	Data displayed
G 3	MANUAL OPERATION Press START to start 24/08/2005 13:12	Operation mode - genset in MAN mode ready to start Date and time (depending on settings)
G 4	AUTOMATIC OPERATION IMPORTANT IMMEDIATE START-UP POSSIBLE 24/08/2005 13:12	Operation mode - genset in AUTO mode ready to start Date and time (depending on settings)
G 5	IMPORTANT AUTOMATIC starting 19min30 24/08/2005 13:12	Operation mode - genset in AUTO mode with programmed start Countdown of micro disconnection delay OR EJP (for France only) Date and time (depending on settings)

Generating set start-up

Screen No.	Screen	Data displayed
G 6	STARTING IN PROGRESS 24/08/2005 13:12	Operating phase - genset starting Date and time (depending on settings)

Screen No.	Screen	Data displayed
G 7	AIR PREHEATING 10sec 24/08/2005 13:12	Operating phase - air preheating prior to genset starting Countdown of the air preheating delay Date and time (depending on settings)

Generating set started

Screen No.	Screen	Data displayed
G 8 Default screen	AVAILABLE POWER 75% 24/08/2005 13:12	Operating phase – genset operating – stable voltage and frequency Available power Date and time (depending on settings)
G 9	AUTOMATIC STOP IN PROGRESS LOAD SUPPRESSION 1min30 24/08/2005 13:12	Operation mode - operation in AUTO mode Power supply device opens (motorised circuit breaker or changeover switch controlled by the TELYS) Countdown of the Mains Return delay OR Test on load delay Date and time (depending on settings)

Screen No.	Screen	Data displayed
G 10	AUTOMATIC STOP IN PROGRESS COOLING 1min30 24/08/2005 13:14	Operation mode - operation in AUTO mode Genset cooling in progress Countdown of the Engine Stop delay (cooling) OR Gradual Stop delay (Water temperature) OR Overload Gradual Stop delay OR No Load Test delay Date and time (depending on settings)
G-10/1	COUPLING IN PROGRESS 24/08/2005 13:14	Operation mode - operation in AUTO mode Synchronisation of the genset with the grid or another genset Date and time (depending on settings)
G-10/2	POWER TRANSFER Grid Generating set 24/08/2005 13:16	Operation mode - operation in AUTO mode Transfer of power from the generating set to the grid Date and time (depending on settings)
G-10/3	POWER TRANSFER Grid Generating set 24/08/2005 13:16	Operation mode - operation in AUTO mode Transfer of power from the grid to the generating set Date and time (depending on settings)

Generating set stoppage

Screen No.	Screen	Data displayed
G 11	STOPPAGE IN PROGRESS 24/08/2005 13:16	Genset stoppage Date and time (depending on settings)

Change of operation mode (switch from MAN mode to AUTO mode when an automatic start demand is issued)

Screen No.	Screen	Data displayed
G 12	AUTOMATIC start demand Do you want to switch to AUTO mode? IMPORTANT Immediate start OK Esc	Operation mode - operation in MAN mode AUTOMATIC start demand

Generating set stop demand if a fault occurs or if STOP is pressed in AUTO mode

Screen No.	Screen	Data displayed
G 13	MAN mode activated Do you want to switch to AUTOMATIC mode? OK Esc	Operation mode - operation in AUTO mode (genset running) Warning message for switch to MAN mode if STOP is pressed or if a fault occurs
G 13/1	The "**51 Hz**" offset must be applied to all of the power plant's gensets Esc	Operating phase – genset operating – stable voltage and frequency Warning message for setting offset on all of the power plant's generating sets

6.3.2 Starting

⚠ Danger	Check that the generating set circuit breaker has triggered.

❶ Connect the generating set battery
❷ Turn the key switch to the ON position (without forcing it to the ON position), the ON lamp will light up (if the lamp does not light up, check and replace the fuse if necessary)

❸ Test the Alarm and Fault LEDs (menu 15 – TEST LAMPS)

```
1 ACTIONS
   1/5
11 MANUAL <> AUTO
12 CONTROL LOAD
13 TEST GENERATING SET
14 PROGRAMS
15 TEST LAMPS
   OK      Esc
```

❹ Press "Esc" several times to return to the following home menu

```
OPERATION
MANUAL

Press START
to start

24/08/2005          13:12
```

❺Check the battery voltage

❻ Press START:

```
AIR PREHEATING

10 seconds

24/08/2005          13:12
```

- If the engine is equipped with an air preheating system, there is a delay (adjustable) before the engine starts (preheating activation period).
- If the motor is not fitted with an air preheating system or once the preheating delay has elapsed, the engine starts up (start of a cycle comprising 3 attempts to start up the engine).

```
START-UP
IN PROGRESS

24/08/2005          13:12
```

Warning: the number of successive and automatic starting attempts is limited to 3.

The following pictogram will flash

```
AVAILABLE POWER

100.0%

24/08/2005          13:12
```

The following pictogram is displayed

The following information is displayed

	Speed of rotation	
	Coolant temperature	Options
	Oil pressure	Options
	Oil Temperature	Options

6.3.3 Switching off

❶ Open the circuit breaker
- ➢ manually OR ➢ by selecting menu 12 "CONTROL LOAD"

The following display will disappear (supply stopped)

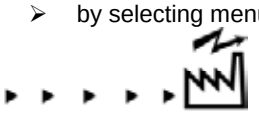

❷ Press the STOP button

❸ The following screen is displayed and the generating set will stop

```
OFF
IN PROGRESS

24/08/2005          13:12
```

❹ Switch TELYS off by turning the key to "OFF" (without forcing it to the "OFF" position).

6.3.4 Alarms and faults

6.3.4.1. Viewing alarms and faults

Alarms and faults are displayed as follows:

① Alarms

All alarms will cause:

➢ the yellow LED to flash "General alarm".

In conjunction with this LED:
- ➢ a flashing pictogram appears on the LCD screen representing the circuit affected by the alarm and the associated indicator, if present (example)

- ➢ message on graphic display (example)

```
FAULT
---------------------
ALARM
Low Fuel Level
25/12/05     15:30

OK=HELP
```

② Faults

All faults will cause:

- **the generating set to stop: immediate or gradual stop (coolant temperature and overload or short circuit)**
- the red LED to flash "General fault".

In conjunction with this LED:

- a flashing pictogram appears on the LCD screen representing the circuit affected by the fault and the associated indicator, if present (example)

- message on graphic display (example)

FAULT
FAULT Oil Pressure 25/12/05 15:30 OK=HELP

Faults have priority over alarms. Faults are displayed in the descending order of their appearance (from the most recent to the oldest).

6.3.4.2. Activation of an alarm or fault

The appearance of an alarm **or** a fault causes the corresponding screen to be displayed (examples below)

FAULT
ALARM Low coolant Level 06/10/06 10:30 OK=HELP

FAULT
FAULT Emergency Stop 06/10/06 15:30 Esc=RESET OK=HELP

Press OK (on the scrolling and selection wheel) to access the help message if it is available (example below)

HELP
Check the level fuel Esc=EXIT

If the alarm is no longer active, it is reset automatically (cause disappears).
Press Esc to reset a fault:

- reset acknowledged if the cause of the fault has been removed
- reset not performed if the cause of the fault is still present.

6.3.4.3. Activation of an alarm and a fault

The appearance of <u>an alarm **and** a fault</u> causes:

- The yellow and red LEDs to flash
- the related screen to be displayed (example below)

```
FAULTS 1/2

FAULT
Emergency Stop
25/12/05 15:30

Esc=RESET          OK=LIST
```

If several faults are present, the number of faults is displayed at the top of the screen.

The faults list can be accessed by pressing OK (of the scrolling and selection wheel) (examples below)

```
FAULTS
[1/2]

FAULT 25/12/05 15:30
Emergency Stop
ALARM 25/12/05 15:30
Low Fuel Level
↳↰      OK=HELP      Esc
```

Press Esc to return to the previous screen.
Press OK to go to the HELP screen (help on the highlighted fault)
Use the scrolling and selection wheel to scroll through the list of faults.

```
HELP

Check:
- Emerg. Stop Pos.
- Connector(s)

Esc
```

If the alarm is no longer active, it is reset automatically (cause disappears).
Press Esc to reset a fault:

- reset acknowledged if the cause of the fault has been removed
- reset not performed if the cause of the fault is still present.

6.3.4.4. Engine fault codes display

Certain alarms and engine faults generate specific fault codes. These codes are standardised according to the J1939 and/or J1587 standards.

Terminology used by the SAE CAN J1939 standard	
SPN: Suspect Parameter Number	This represents the system or component at fault, for example: SPN 100, indicates an oil pressure problem or a problem with the oil pressure sensor.
FMI: Failure Mode identifier	This represents the type of fault that has occurred. This may be an electrical, mechanical or equipment fault.
Terminology used by VOLVO	
SID: System Identifier	This term, used in the J1587 standard, has an equivalent in the J1939 standard (SPN). However, this term corresponds, more particularly, to an assembly of components, for example, the injection system.
PID: Parameter Identifier	This term, used in the J1587 standard, has an equivalent in the J1939 standard (SPN). However, this term corresponds, more particularly, to a specific component, for example, a sensor.
PPID: Parameter Identifier	This term, used in the J1587 standard, has an equivalent in the J1939 standard (SPN). PPID corresponds to PID, but is only used by VOLVO.
FMI: Failure Mode identifier	This represents the type of fault that has occurred. This may be an electrical, mechanical or equipment fault. VOLVO uses a SID-FMI or PID-FMI or PPID-FMI combination.
Terminology used by JOHN DEERE	
SPN: Suspect Parameter Number	This represents the system or component at fault, for example: SPN 100, indicates an oil pressure problem or a problem with the oil pressure sensor.
FMI: Failure Mode identifier	This represents the type of fault that has occurred. This may be an electrical, mechanical or equipment fault.

In the event of a fault, the screen will display the following message:

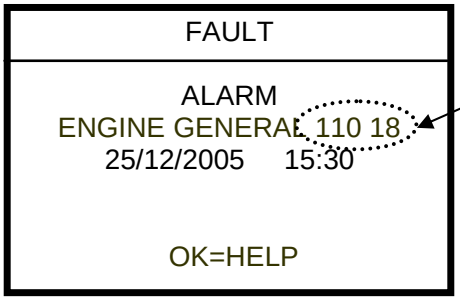

Engine fault code.
Pressing OK will display fault finding information.
In addition, appendix D indicate the meaning of the code. The checking and maintenance operations to carry out in order to solve the fault are included in the user and maintenance manuals of the engines supplied with the generating set documentation.

For JOHN DEERE (JD) and VOLVO (VO) engines, the codes displayed are SPN and FMI codes.

6.3.4.5. Horn reset

Depending on the settings made (menu 363 - HORN), the activation of an alarm and/or a fault leads to the horn sounding and the following screen appearing:

This screen will display first any messages relating to the alarms and faults that appear as soon as OK is pressed.

7. Maintenance schedule

7.1. Reminder of use

The maintenance interval frequency and the operations to be carried out are outlined in the maintenance schedule, given as a guideline.
N.B. the environment in which the generating set is operating determines this schedule.
If the generating set is used in extreme conditions, shorter intervals between maintenance procedures should be observed
These maintenance intervals only apply to generating sets running on fuel, oil and coolant which conform to the specifications given in this manual.

7.2. Maintenance safety instructions

Before each operation, please observe the following maintenance safety instructions:

- ✓ read the safety instructions carefully (chapter 1),
- ✓ refer systematically to the maintenance instructions,
- ✓ the battery isolating switch must be in the open position,
- ✓ no operations must be carried out while the motor is running,
- ✓ wear protective equipment (gloves, goggles, safety shoes etc.),
- ✓ before operating on a pressurised circuit, ensure that the circuit pressure has been reduced (atmospheric pressure),
- ✓ after the operations, ensure that the equipment is clean, or clean it if necessary.

7.3. Table of maintenance operations

OPERATIONS	50 h	100 h	250 h	500 h	1000 h	1500 h	3000 h	2 years	20 000 h 3 years
Generator set									
• Check the general condition					●				
• Check the tightening torques					●				
• Check the absence of leaks				●					
• Check the condition of battery charge				●					
• Clean the battery terminals				●					
• Check condition and connections of electrical equipment				●					
• Clean with compressed air the relays and contactors				●					
Engine									
• Check engine oil and coolant level	●								
• Check water bowl	●								
• Check air cleaner	●								
• Replace engine oil and oil filter[a]			●						
• Inspect belt and adjust and belt tension			●						
• Inspect and clean solenoid fuel pump filter[a]		●							
• Replace fuel filter				●					
• Replace solenoid fuel pump filter[a]				●					
• Inspect valve clearance				●					
• Check glow plug				●					
• Inspect starter					●				
• Inspect alternator					●				
• Retighten bolts and nuts on the engine[a]					●				
• Clean nozzle tip						●			
• Check and Clean fuel injection nozzle							●		
• Inspect turbocharger							●		
• Change coolant								●	
Alternator									
• Check the tightening torques	After the first 20 hours								
• Check the general condition									
• Check the various electrical connections of the installation									
• Grease the bearings									●

[a] After the first 50 service hours for a new or overhauled engine

7.4. Cover maintenance

! **IMPORTANT**	The sealing between the enclosure and the frame and between the frame and the retention tank is ensured by a gasket. It is essential to replace the gasket if the enclosure has been removed.

Users must maintain the enclosures and base frames to ensure that the paintwork retains all its protective properties.

7.5. Trailer maintenance

Operations \ Frequency		When commissioning and before towing	Every 6 months	Every year
Check	General condition of the vehicle	●		
	Tyre pressure	●		
	Tighten the wheel nuts	●		
	Efficiency of the automatic brake		●	●
	Efficiency of the parking brake		●	●
	Braking adjustment and distribution across all wheels		●	●
	Wear on brake linings and drums			●
	No play in the hubs			●
	Play in the clamping tube			●
	Play in the ball socket or ring			●
Lubricate	Braking control hinges and joints		●	●
	Stabilising		●	●

Lubricate or grease the moving parts on the coupling device (see lubrication point examples in the Figure 23).

- ✓ Recommended lubricant: general purpose grease compliant with DIN 51825 KTA 3KA.

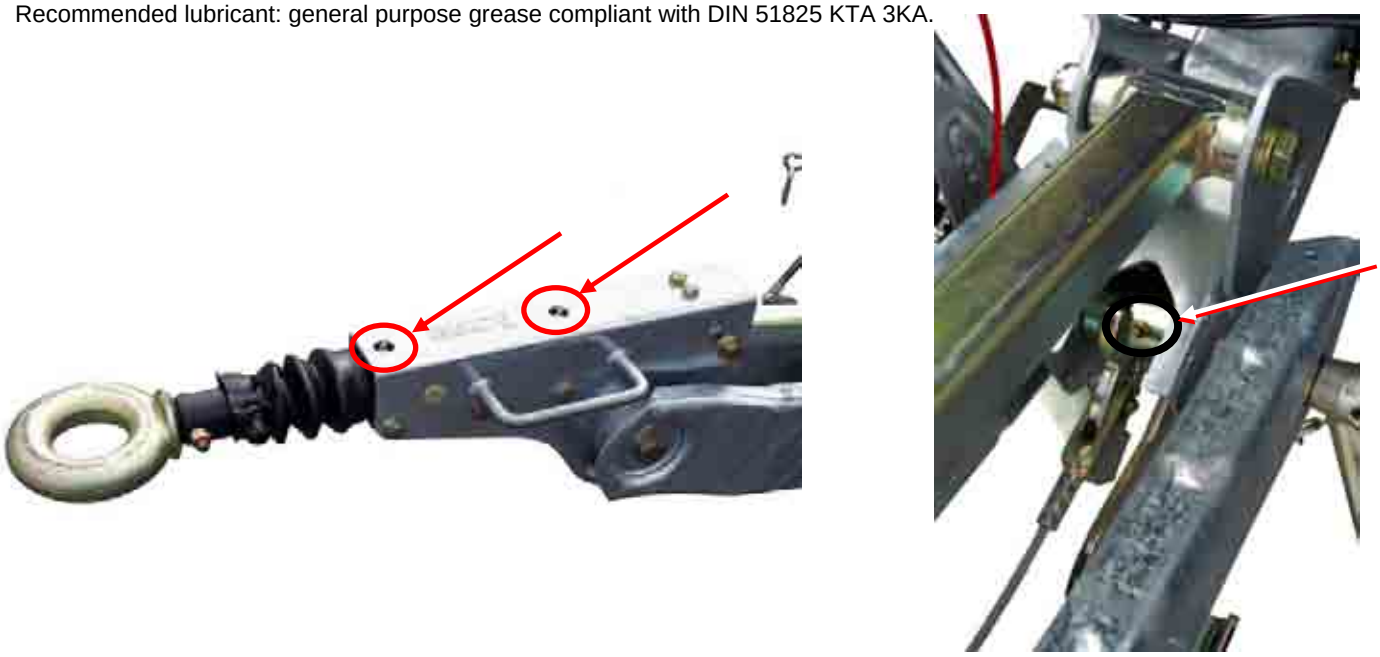

Figure 23 : Trailer lubrication/greasing points

7.6. Fault finding

Refer to the user manual and engine and alternator maintenance manuals appended.
Additionally, in the event of an abnormal rise in engine temperature, check that the radiator is clean.

7.7. No load and under load tests

Notes on operation at no load and under load:
When operating at no load or low load (< 30% of nominal power), the operating conditions do not allow optimum running of the engine. The main causes are as follows:

- ✓ The low volume of fuel burned in the combustion chamber leads to incomplete combustion; the resulting thermal energy means that the optimum engine operating temperature cannot be reached.
- ✓ Overheated engines have lower compression ratios (low compression ratio without turbocharging), which are defined for full load and not suitable for good combustion at low load.

All of these factors lead to choking of the engine, in particular the piston rings and valves, which leads to:

- ✓ Accelerated wear and glazing of the cylinder liners
- ✓ Loss of sealing of seats, and sometimes sticking of valve stems.

Consequently, operating any turbocharged engine at low load (< 30%) can only have adverse repercussions on an engine's operation and its service life. Maintenance intervals will have to be shortened to accompany harsh operating conditions. Shortening draining intervals, among other things, will enable you to change the oil more frequently, which will tend to be choked with unburnt particles and contaminated with fuel. Adding a load bench is generally used to limit low load phases, and obtain the periodic full loads necessary to unchoke the engine.
Finally, when operating under load, we advise vigilance towards the oil breather circuit, and more particularly towards engines which have the crankcase vent connected to the turbocharger inlet (risk of oil or oil vapour absorption and accelerated engine speed).

On load tests:
It is recommended to conduct an on load test on the generating set monthly, for a period of around 1 hour after stabilisation of the parameters.
The load must be greater than 50% of nominal power (ideally 80%), to ensure unchoking of the engine and to obtain a decent picture of the generating set operation.

Off load test (no load):
This test is not recommended; it must not exceed 10 minutes, and must not be repeated without a monthly on load test. This test only allows you to check for correct engine start-up. It does not allow you to check that the generating set is working properly.

8. Starter batteries

DANGER		
	Risk of explosion or fire (oxygen and hydrogen present). The battery must never be exposed to any naked flames or sparks. **Risk of sparks forming and an explosion**. When fitting the battery, never invert the polarities. Do not short the battery terminals with a tool or other metal object. **Risk of injury**. Battery electrolyte is extremely corrosive. Always protect your eyes, skin and clothing when handling batteries. Always wear protective goggles and gloves. In the event of contact with the skin, wash thoroughly with water and soap. If the eyes are splashed, rinse thoroughly with water and consult a doctor immediately.	

8.1. Checking the electrolyte level

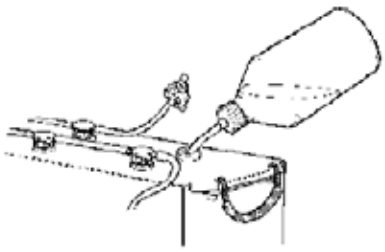

The electrolyte level must be approximately 10 mm above the battery plates.

1. Top up with distilled water if necessary.
2. Pour the distilled water carefully to avoid any splashes.

Wear protective goggles and rubber gloves when handling the battery (adding water, charging, etc.).

Note: some batteries requiring no maintenance form the subject of specific instructions which must be respected.

After the battery has been topped up, it must be recharged for at least 30 minutes.

8.2. Checking the voltage/acid density

Every 2 months, the following checks must be performed:

1. Check the density of the acid contained in the cells (all the battery cells must have the same density; if this is not the case, the battery must be replaced)
2. Check the voltage when idle.

Acid density	Charge status	Voltage when idle	Observation / action
1.27	100%	Above 12.60 V	
1.25	80%	12.54 V	
1.20	60%	12.36 V	**From 60% recharge**
1.19	40%	12.18 V	**Risk of sulphation**
1.13	20%	Below 11.88 V	**Unusable**

The results of the density and voltage measurements make it possible to define the charge status of the battery. If the charge status is less than 60%, the battery must be recharged.

8.3. Charging the battery

Highly discharged or sulphated batteries (formation of whitish lead sulphate deposit on the plates, which becomes hard) can no longer regenerate or be charged in a generating set.

!	A discharged battery should be recharged immediately, or else it will suffer irreparable damage.
IMPORTANT	

Battery charge

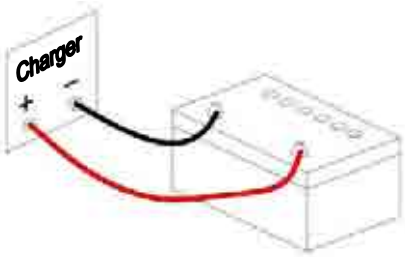

Example of charge:

- 12V 60 Ah battery = 6 A charging current;
- Charge status: 50% (acid density 1.19 and voltage when idle 12.30V);
- The battery is short 30 Ah, and this must be recharged.
- Charge factor: 1.2;
- 30 Ah x 1.2 = 36 Ah to be charged;
- Charging current: 6A, approximately 6 hours charging required; the charging current must always be 1/10th of the nominal capacity of the battery.

Recharging is complete when the battery voltage and the acid density stop increasing.

The power of the charger must be suitable for the battery to be charged and the charging time available.

Note: if several batteries connected together are being recharged, the following points must be checked:

- *Are the batteries connected in series?*
- *Is the voltage chosen exact? 1 battery x 12 V, 3 x 36V batteries.*
- *Adjust the charge current to the lowest battery.*
- *The power difference between the batteries must be as low as possible.*

8.4. Cleaning the battery

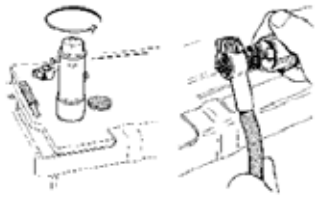

Keep the batteries clean and dry. The presence of impurities and rust on the battery and terminals may cause the current jumps, voltage drops and the battery to discharge, particularly in humid weather.

1. Clean any signs of oxidation on the battery terminals and the cable terminals using a brass brush.
2. Fully tighten the cable terminals and lubricate them with grease for battery terminals or vaseline. A terminal which is not secured correctly may cause sparks and therefore lead to an explosion.

8.5. Fault finding

Fault observed	Probable origin	Measures or observations
The acid heats up when a new battery is filled	Incorrect composition Incorrect storage Prolonged storage in a damp place	Cool Charge the battery Check the acid density
The acid escapes through the filler holes	The battery is too full	Reduce the battery fluid level
Acid level too low	Battery tray not leaktight Considerable formation of gas due to a very high charging voltage	Replace the battery Check the charger and repair if necessary
Acid level too low Incorrect operation from start-up	Insufficient charge Short circuit in the power circuit Consumption fault	Recharge the battery Check the electrical installation
Acid density too high	The battery has been filled with acid instead of water	Reduce the acid level and fill with distilled water. Repeat the operation if necessary
Starting problems Starting test incorrect	Battery empty Battery exhausted or faulty Capacity too low Battery sulphated	Recharge the battery Replace the battery
Battery terminals melted	Incorrect electrical connection Battery cabling incorrect	Tighten the ends of the battery cables or replace them if necessary and replace the battery
One or two cells release a lot of gas at high charge	Faulty cell(s)	Replace the battery
The battery discharges very quickly	Charge status too low Short circuit in the power circuit High self-discharge (for example: through electrolyte contamination) Sulphation (storage of discharged battery)	Check the load Replace the battery
Short service life	Incorrect battery part no Repeated deep discharging Battery stored too long without charge	Define the correct battery part no. for the recommended use It is recommended to charge the battery using a regulator
High water consumption	Overload Charging voltage too high	Check the charger (voltage regulator).
The battery explodes	Sparks after battery charging Short circuit Connection or disconnection during charging Internal fault (for example: interruption) and low electrolyte level	Replace the battery

9. Options

9.1. Dual frequency

IMPORTANT	This operation must be carried out by a qualified electrician. These operations must only be carried out when the generating set is stopped, until you are instructed to start up the generating set.

- Close the battery isolating switch to turn on the TELYS 2.

- Turn the supply switch of the TELYS 2 to the "ON" position.

- Press the "MENU" key.

- Using the knob, select "3 SETTINGS" and press the knob to confirm.

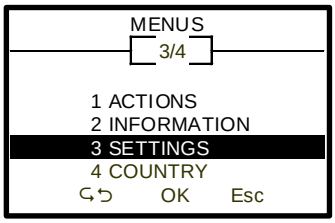

- As not all the settings are available, go to the "37 INSTALLER ACCESS" menu to enter the code "1966" using the knob to call up the desired menus.

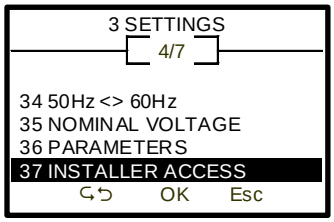

- Using the knob, select "34 50Hz<>60Hz" and press the knob to confirm.

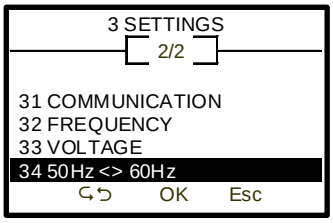

- Select and confirm the desired frequency using the knob to scroll and confirm (50 Hz or 60 Hz).

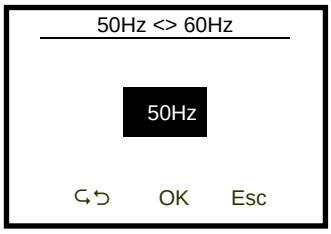

- Return to the "3 SETTINGS" screen and use the knob to select "35 NOMINAL VOLTAGE" then press the knob to confirm.

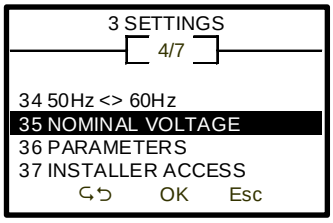

- Set the desired voltage then confirm using the scroll and confirm knob.

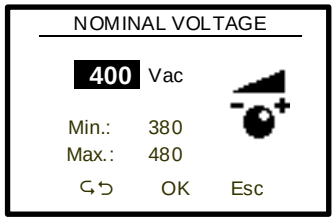

- Select the desired configuration using the configuration option selector located next to the TELYS 2 control unit.

- Start up the generating set by pressing the "START" button.

- Adjust the voltage after starting up the generating set using the 2003R08 potentiometer.

IMPORTANT	Warning: when switching to 60Hz, do not use sockets if fitted to the generating set.

9.2. Neutral system

Turn the switch to the desired neutral system.

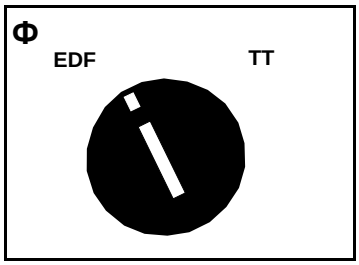

Important	**Select the neutral system with the generating set switched off.**

9.3. Fuel supply valve

The 3-way valve is used to select between the generating set fuel tank and an external fuel supply.

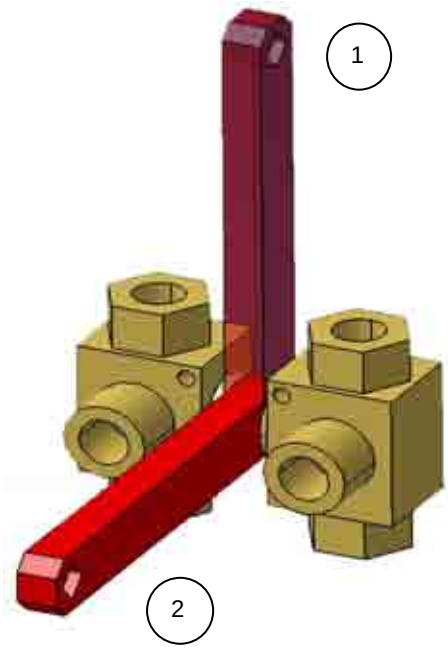

Valve in vertical position (no. 1): generating set supplied by the daily service tank.
Valve in horizontal position (no. 2): generating set supplied by the external tank.

10. Appendix

10.1. Appendix A – Engine user and maintenance manual

User guide and maintenance manual

MITSUBISHI
Engine
SERIE SL

99610-31120
01/07/2009

33522049401_3_1

OPERATION & MAINTENANCE MANUAL

MITSUBISHI DIESEL ENGINES

SL-SERIES

The operator and supervisor are requested to read this Operation and Maintenance Manual carefully before operating the engine or conducting inspection and maintenance.
Never operate the engine or conduct maintenance work without completely understanding this manual.

MITSUBISHI HEAVY INDUSTRIES, LTD.

July 2009
Pub. No. 99610-31120

INTRODUCTION

This operation and maintenance manual contains detailed operation, inspection and maintenance information for engines from Mitsubishi Heavy Industries, Ltd.

Please read this manual thoroughly before proceeding with operation, inspection, and maintenance work for correct use and servicing.

Failure to follow directions in this manual may result in serious accidents.

Limited warranty

Mitsubishi Heavy Industries, Ltd. will repair or replace parts returned to us when we judges that the parts are defective in material and/or workmanship after conducting inspection.
Mitsubishi Heavy Industries, Ltd.'s warranty is limited to the compensation work of repair or replacement of parts.
The warranty coverage is effective for the original purchaser only. Those to whom ownership is later transferred are not provided with the warranty.

- **Mitsubishi Heavy Industries, Ltd.'s makes no warranties, either expressed or implied, except as provided in this manual, including, but not limited to, warranties as to marketability, merchantability, fitness for a particular purpose or use, or against infringement of any patent.**
- **Mitsubishi Heavy Industries, Ltd. will not be liable for any damages or consequential damages, including, but not limited to, damages or other costs resulting from any abuse, misuse, misapplication of the engine and devices supplied from us.**
- **Mitsubishi Heavy Industries, Ltd. will not be liable for any damages or personal injuries resulting from any modification, without our written permission, of the engine and devices supplied from us.**
- **Mitsubishi Heavy Industries, Ltd. will not be liable for any damages or production losses caused by the use of fuel, engine oil and/or long life coolant (LLC) that we are not recommended.**
- **The owner of the engine is responsible for the performance of the required maintenance listed in this operation manual.**
  Mitsubishi Heavy Industries, Ltd. may deny the warranty coverage if the engine or part has failed due to inadequate or improper maintenance.

Emission warranty

IMPORTANT

The following warranty applies to the engines that are approved of the emission regulation of the U.S. Environmental Protection Agency.

Warranty coverage

Mitsubishi Heavy Industries, Ltd. warrants to the first owner and each subsequent purchaser of a new non-road diesel engine that the emission control system of your engine:

- is designed, built and equipped so as to conform at the time of sales with all applicable regulation of the U.S. Environmental Protection Agency.If the vehicle in which the engine is installed is registered in the state of California, a separate California emission regulation also applies.
- is free from the defects in material and workmanship which will cause the engine to fail to meet these regulations within the warranty period.

Then its warranty period is

The emission warranty period is shown below.

However, if your engine warranty period is longer than the emission warranty period, the emission warranty period extends to same as the engine warranty period.

Below warranty period shall begin on the date the engine is delivered to the first owner.

If your engine is certified as	And its maximum power is	And its rated speed is	Then its warranty period is
Variable speed or constant speed	kW < 19	Any speed	1,500 hours or 2 years, whichever comes first.
Constant speed	19 ≤ kW < 37	3800 min^{-1} or more	1,500 hours or 2 years, whichever comes first.
Constant speed	19 ≤ kW < 37	Less than 3000 min^{-1}	3000 hours or 5 years, whichever comes first.
Variable speed	19 ≤ kW < 37	Any speed	3000 hours or 5 years, whichever comes first.
Variable speed or constant speed	kW ≥ 37	Any speed	3000 hours or 5 years, whichever comes first.

Warranted parts

Mitsubishi Heavy Industries, Ltd. warrants the parts which will increase the emission of pollutants when they become defective.

The followings are examples.

- Inlet/Exhaust manifold
- Crankcase ventilation system
- Fuel system
- Fuel injection nozzle

LIMITED WARRANTY

Refer to "LIMITED WARRANYT".

California emission control warranty statement your warranty rights and obligations

IMPORTANT

The following warranty applies to the engines that are approved of the emission regulation of the California Air Resources Board (CARB).

The **California Air Resources Board (CARB)** is pleased to explain the **emission control system warranty** on you 2008 or later engine.In California, new heavy-duty off-road engines must be designed, built, and equipped to meet the State's stringent anti-smog standards.Mitsubishi Heavy Industries, Ltd. must warrant the emission control system on your engine for the periods of time listed below provided there has been no abuse, neglect or improper maintenance of your engine.

Your emission control system may include parts such as the fuel-injection system and the air induction system. Also included may be hoses, belts, connectors and other emission-related assemblies.

Where a warrantable condition exists, Mitsubishi Heavy Industries, Ltd. will repair your heavy-duty off-road engine at no cost to you including diagnosis, parts, and labor.

MANUFACTURER'S WARRANTY COVERAGE:

The **2008** and later heavy-duty off-road engines are warranted for the Warranty Period. If any emission-related part on your engine is defective, the part will be repaired or replaced by Mitsubishi Heavy Industries, Ltd.

OWNER'S WARRANTY RESPONSIBILITIES:

- As the heavy-duty off-road engine owner, you are responsible for the performance of the **required maintenance listed in your owner's manual**.Mitsubishi Heavy Industries, Ltd. recommends that you retain all receipts covering maintenance on your heavy-duty off-road engine, but Mitsubishi Heavy Industries, Ltd. cannot deny warranty solely for the lack of receipts or for your failure to ensure the performance of all scheduled maintenance.
- As the heavy-duty off-road engine owner, you should however be aware that Mitsubishi Heavy Industries, Ltd. may deny you warranty coverage if your heavy-dutyoff-road engine or a part has failed due to abuse, neglect, improper maintenance or unapproved modifications.
- Your engine is designed to operate on diesel fuel only. Use of any other fuel may result in your engine no longer operating in compliance with California's emissions requirements.
- You are responsible for initiating the warranty process. The Air Rexources Board suggests that you present your heavy-duty off-road engine to a Mitsubishi Heavy Industries, Ltd. dealer or distributor dealer as soon as problem exists. The warranty repairs should be completed by the dealer or distributor as expeditiously as possible.

If you have any questions regarding your warranty rights and responsibilities, you should contact Mitsubishi Engine North America at **1-630-268-0750**.

Warranty coverage

(a) The warranty period shall begin on the date the engine or equipment is delivered to an ultimate purchaser.

(b) Mitsubishi Heavy Industries, Ltd. warrants to the ultimate purchaser and each subsequent purchaser of the engine registered in the state of California that the engine is:

(1) Designed, built and equipped so as to conform with all applicable regulations adopted by the Air Resources Board.

(2) Free from defects in materials and workmanship which cause the failure of a warranted part to be identical in all material respects to the parts as described in Mitsubishi Heavy Industries, Ltd.'s application for certification for a period of 5 years or 3,000 hours of operation, whichever occurs first. In the absence of a device to measure hours of use, the engine shall be warranted for a period of 5 years. For all engines rated less than 19kW, and for constant-speed engines rated under 37 kW with rated speeds higher than or equal to 3,000 min^{-1}, the period of 2 years or 1,500 hours of operation, whichever occurs first, shall apply. In the absence of a device to measure hours of use, the engine shall be warranted for a period of 2 years.

(c) The warranty on emission-related parts shall be interpreted as follows:

(1) Any warranted part which is not scheduled for replacement as required maintenance in the written instructions required by Subsection (e) shall be warranted for the warranty period defined in Subsection (b) (2). If any such part fails during the period of warranty coverage, it shall be repaired or replaced by Mitsubishi Heavy Industries, Ltd. according to Subsection (4) below. Any such part repaired or replaced under the warranty shall be warranted for the remaining warranty period.

(2) Any warranted part which is scheduled only for regular inspection in the written instructions required by Subsection (e) shall be warranted for the warranty period defined in Subsection (b) (2). A statement in such written instructions to the effect of "repair or replace as necessary" shall not reduce the period of warranty coverage. Any such part repaired or replaced under the warranty shall be warranted for the remaining warranty period.

(3) Any warranted part which is scheduled for replacement as required maintenance in the written instructions required in Subsection (e) shall be warranted for the period of time prior to the first scheduled replacement point for that part.If the part fails prior to the first scheduled replacement, the part shall be repaired or replaced by Mitsubishi Heavy Industries, Ltd. according to Subsection (4) below. Any such part repaired or replaced under warranty shall be warranted for the remainder of the period prior to the first scheduled replacement point for the part.

(4) Repair or replacement of any warranted part under the warranty provisions shall be performed at no charge to the owner at a warranty station.

(5) Notwithstanding the provisions of Subsection (4) above, warranty services or repairs shall be provided at all Mitsubishi Heavy Industries, Ltd. distribution centers that are franchised to service the subject engines.

(6) The owner shall not be charged for diagnostic labor that leads to the determination that a warranted part is in fact defective, provided that such diagnostic work is performed at a warranty station.

(7) Mitsubishi Heavy Industries, Ltd. shall be liable for damages to other engine components proximately caused by failure under warranty of any warranted part.

(8) Throughout the engine's warranty period defined in Subsection (b) (2), Mitsubishi Heavy Industries,Ltd. shall maintain a supply of warranted parts sufficient to meet the expected demand for such parts.

(9) Any replacement part may be used in the performance of any maintenance or repairs and must be provided without charge to the owner. Such use shall not reduce the warranty obligations of Mitsubishi Heavy Industries, Ltd..

(10) Add-on or modified parts that are not exempted by the Air Resources Board may not be used. The use of any non-exempted add-on or modified p arts shall be grounds for disallowing a warranty claim. Mitsubishi Heavy Industries, Ltd. shall not be liable to warrant failures of warranted parts caused by the use of a non-exempted add-on or modified part.

(11) The Air Resources Board may request and, in such case, Mitsubishi Heavy Industries, Ltd. shall provide, any documents which describe that Mitsubishi Heavy Industries, Ltd.'s warranty procedures or policies.

(d) Warranted parts list.

(1) Fuel metering system

(A) Fuel injection system.

(B) Air/fuel ratio feedback and control system.

(C) Cold start enrichment system.

(2) Air induction system

(A) Controlled hot air intake system.

(B) Intake manifold.

(C) Heat riser valve and assembly.

(D) Turbocharger/supercharger systems.

(E) Charged air cooling systems.

(3) Exhaust gas recirculation (EGR) system

(A) EGR valve body, and carburetor spacer if applicable.

(B) EGR rate feedback and control system.

(4) Air injection system

(A) Air pump or pulse valve.

(B) Valves affecting distribution of flow.

(C) Distribution manifold.

(5) Catalyst or thermal reactor system

(A) Catalytic converter.

(B) Thermal reactor.

(C) Exhaust manifold.

(6) Particulate controls

(A) Traps, filters, precipitators, and any other devices used to capture particulate emissions.

(B) Regenerators, oxidizers, fuel additive devices, and any other device used to regenerate or aid in the regeneration of the particulate control device.

(C) Control device enclosures and manifolding.

(D) Smoke puff limiters.

(7) Advances oxides of nitrogen (NOx) controls

(A) NOx absorbers.

(B) Lean NOx catalysts.

(C) Selective catalyst reduction.

(D) Reductant (urea/fuel) containers/dispensing systems.

(8) Positive crankcase ventilation (PCV) system

(A) PCV valve.

(B) Oil filler cap.

(9) Miscellaneous items used in above systems

(A) Vacuum, temperature, and time sensitive valves and switches.

(B) Electronic control units, sensors, solenoids, and wiring harnesses.

(C) Hoses, belts, connectors, assemblies, clamps, fittings, tubing, sealing gaskets or devices, and mounting hardware.

(D) Pulleys, belts and idlers.

(E) Emission control information labels.

(F) Any other part with the primary purpose of reducingemissions or that can increase emission during failure without significantly degrading engine performance.

(e) Mitsubishi Heavy Industries, Ltd. shall furnish with each new engine written instructions for the maintenance and use of the engine by the owner.

LIMITED WARRANTY:

Refer to "LIMITED WARRANTY".

Important information

- To avoid the potential hazard, accident prevention activities must be planned methodically and conducted continually by considering all aspect of engine operation, maintenance and inspection.All related personnel, including managers and supervisors, should actively participate, recognize their roles and organize themselves and their work to ensure a safe environment.
- The foremost safety objective is to prevent accidents which may result in injury or death, or equipment damage.
- Always observe laws or regulations of the local or federal/national government.
- Mitsubishi Heavy Industries, Ltd. cannot foresee all potential dangers of the engine, potential danger resulting from human error and other causes, or danger caused by a specific environment in which the engine is used. Since there are many actions that cannot be performed or must not be performed, it is impossible to indicate every caution in this manual or on warning labels. As such, it is extremely important to follow directions in this manual and also to take general safety measures when operating, maintaining and inspecting the engine.
- When the engine is used by individuals whose native language is not English, the customer is requested to provide thorough safety guidance to the operators.Also add safety, caution and operating signs that describe the original warning label statements in the native language of the operators.
- The engine must be operated, maintained and inspected only by qualified persons who have thorough knowledge of engines and their dangers and who also have received risk avoidance training.
- To prevent an accident, do not attempt to carry out any operation other than those described in this manual, and do not use the engine for any unapproved purpose.
- When the ownership of the engine is transferred, be sure to provide this manual with the engine to the new owner. Also inform Mitsubishi Heavy Industries, Ltd. of the name and address of the new owner of the engine.
- This manual is copyrighted and all rights are reserved.No part of this manual, including illustrations and technical references, may be photocopied, translated, or reproduced in any electronic medium or machine readable form without prior written consent from Mitsubishi Heavy Industries, Ltd.
- The contents in this manual are subject to change at any time without notice for improvement of the engine.
- Pictures or illustrations of the product in this manual may differ from those of product you have. Please note that, depending on specifications, items described in this manual may differ from those on your engine in shape, or may not be installed on your engine.
- Please contact a dealer of Mitsubishi Heavy Industries, Ltd. if you need more information or if you have any questions.
- If you lost or damaged this manual, obtain a new copy at a dealer of Mitsubishi Heavy Industries, Ltd. as soon as possible.
- Mitsubishi Heavy Industries, Ltd. recommends the engine owner to install an hour meter on the engine due to monitor correct running intervals and to perform the maintenance at the appropriate timing.

Warning indication

The following means are used to call the attention of the operators and maintenance personnel to potential dangers of the engine.

- Warning statements in the manual
- Warning labels affixed on the engine

Warning statements

The warning statements in this manual describe potential danger in operating, inspecting or maintaining the engine, using the following 5 classifications to indicate the degree of potential hazard.

Failure to follow these directions could lead to serious accidents which could result in personal injury, or death in the worst case.

Understand the directions well, and handle engines with following directions.

DANGER	Indicates an immediately hazardous situation which, if not avoided, will result in death or serious injury.
WARNING	Indicates a potentially hazardous situation which, if not avoided, could result in death or serious injury.
CAUTION	Indicates a potentially hazardous situation which, if not avoided, may result in minor or moderate injury.
CAUTION	Indicates a potentially hazardous situation which, if not avoided, may result in property damage.
Note :	Indicates important information or information which is useful for engine operation.

Units of measurement

Measurements are based on the International System of Units (SI), and they are converted to the metric system units in this manual using the following conversion rates.

- Pressure :1 MPa = 10.197 kgf/cm^2
- Torque :1 N·m = 0.10197 kgf·m
- Force :1 N = 0.10197 kgf
- Horsepower :1 kW = 1.341 HP = 1.3596 PS
- Meter of mercury :1 kPa = 0.75 cmHg
- Meter of water :1 kPa = 10.197 cmH_2O(cmAq)
- Engine speed :1 min^{-1} = 1 rpm
- Kinetic viscosity:1 mm^2/s = 1 cSt

Abbreviations, standards and others

- API = American Petroleum Institute
- ASTM = American Society for Testing and Materials
- ISO = International Organization for Standardization
- JIS = Japanese Industrial Standards
- LLC = Long Life Coolant
- MIL = Military Specifications and Standards
- MSDS = Material Safety Data Sheet
- SAE = Society of Automotive Engineers

CONTENTS

Chapter 1
BASIC SAFETY PRECAUTIONS

Fire and explosions 1-1
Keep flames away..... 1-1
Keep engine surrounding area tidy and clean.. 1-1
Care for fuel, oil and exhaust gas leakage..... 1-1
Use explosion-proof lighting apparatus..... 1-1
Prevent electrical wires from short-circuiting.... 1-1
Keep fire extinguishers and a first-aid kit handy 1-1
Stay clear of all rotating and moving parts 1-2
Install protective covers around rotating parts . 1-2
Check work area for safety 1-2
Stay clear of moving parts while engine is running 1-2
Lockout and tagout 1-2
Keep engine stopped during servicing..... 1-2
Always restore engine turning tools after use .. 1-2
Changing the engine speed setting is prohibited 1-2
Be careful of exhaust fume poisoning 1-3
Operate engine in a well-ventilated area..... 1-3
Be careful of falling down 1-3
Lift engine carefully 1-3
Do not climb onto the engine 1-3
Always prepare stable scaffold 1-3
Protect ears from noise 1-4
Wear ear plugs..... 1-4
Be careful of burns 1-4
Do not touch the engine during or immediately after operation..... 1-4
Do not open the radiator filler cap when the engine is hot..... 1-4
Do not touch high pressure injection fuel..... 1-4
Refill coolant only after the coolant temperature dropped..... 1-4
Be careful when handling fuel, engine oil or LLC 1-5
Use only specified fuel, engine oil and LLC 1-5
Handle LLC carefully..... 1-5
Proper disposal of waste oil, LLC and coolant 1-5
When abnormality occurs.....1-5
Do not add coolant immediately after a sudden stop due to overheating..... 1-5
Avoid immediate restart after abnormal stop.... 1-5
Avoid continuous engine operation at low oil pressure 1-5
If belt breaks, stop engine immediately..... 1-5
Service battery 1-6
Handle the battery correctly 1-6
Other cautions..... 1-7
Never modify engine 1-7
Observe safety rules at work site 1-7
Work clothing and protective gear..... 1-7
Never break seals 1-7
Perform all specified pre-operation inspections and periodic inspections..... 1-7
Break-in the engine 1-7
Warm up the engine before use..... 1-7
Never operate the engine in an overloaded condition..... 1-7
Conduct cooling operation before stopping the engine 1-8
Protection of the engine against water entry.... 1-8
Properly maintain the air cleaner and pre-cleaner 1-8
Use of tools optimum for each work..... 1-8
Avoidance of prolonged time of starter operation 1-8
Do not turn off the battery switch during operation 1-8
Cautionary instructions for transporting the engine 1-8

Chapter 2
NAME OF PARTS

Engine external diagrams 2-1
Equipment and instrument..... 2-4
Starter switch 2-4
Preheat indicator 2-4
Water temperature meter and thermo unit 2-5
Ammeter..... 2-5
Hour meter 2-5
Stop solenoid 2-6
Engine protection devices..... 2-7
Oil pressure switch..... 2-7
Thermo switch..... 2-7
Air cleaner indicator 2-7

Chapter 3
OPERATION

Preparations for operation 3-1
Engine external - Inspect 3-1
Battery electrolyte level - Inspect 3-1
Fuel tank oil level - Check 3-2
Engine oil level - Check..... 3-2
Coolant level - Check 3-3
Starting 3-4
Automatic glow plug 3-4
Manual glow plug 3-4
Warm up operation 3-5
Checking engine oil pressure 3-5
External inspection during warm up 3-5
Operation.....3-6
Cautions when operating 3-6
Inspection during operation..... 3-6
Stopping 3-7
Inspection after stopping 3-7

Chapter 4
FUEL

Recommended fuel 4-1
Handling fuel.....4-1

Chapter 5
ENGINE OIL

Recommended engine oil.....5-1
Selection of oil viscosity.....5-1
Handling engine oil 5-1
Engine oil performance requirements..5-2
Engine oil deterioration mechanisms...5-2
Definition of properties of engine oil 5-3
Viscosity 5-3
Total base number 5-3
Total acid number 5-3
Water content..... 5-3
Flash point..... 5-3
Insoluble..... 5-3
Service Limits of engine oil.....5-4

Chapter 6
COOLANT

Recommended water for coolant 6-1
Long life coolant (LLC)..... 6-1
Genuine LLC..... 6-1
Other brand LLCs 6-2
Standard for other brand LLC 6-2
General demands of LLC 6-2
LLC specification 6-3
Maintenance of LLC..... 6-5
Replacement intervals of LLC 6-5
LLC concentration 6-5
Importance of LLC 6-6
Characteristics of LLC additive and important notes 6-6
Examples of abnormalities caused by LLC (amine type) 6-6
Pitting of iron parts 6-6
Corrosion of aluminum parts 6-6
Pitting and clogging of the radiator..... 6-6

Chapter 7
MAINTENANCE SCHEDULE

How to use the maintenance schedule..... 7-1
Maintenance schedule 7-2

Chapter 8
PERIODIC INSPECTION AND MAINTENANCE PROCEDURES

Basic engine 8-1
Belt and belt tension - Inspect and Adjust..... 8-1
Fuel system 8-2
Fuel tank - Drain water..... 8-2
Solenoid fuel pump filter - Inspect and clean ... 8-2
Fuel system - Bleed air 8-3
Water sedimenter - Drain water 8-5
Fuel filter (cartridge type) - Replace..... 8-5
Fuel filter element (switching cock type) - Replace 8-6
Solenoid fuel pump filter - Replace 8-6
Lubricating system.....8-7
Engine oil and Oil filter - Replace..... 8-7
Cooling system 8-10
Coolant - Change 8-10
Radiator fins - Check and Clean 8-13
Inlet and exhaust systems 8-14
Air cleaner - Check..... 8-14
Turbocharger - Inspect..... 8-14
Pre-cleaner - Clean, Inspect and Replace 8-15
Air cleaner element - Clean, Check and Replace 8-16
Electrical system.....8-17
Starter - Inspect..... 8-18
Alternator - Inspect..... 8-18

Chapter 9
LONG-TERM STORAGE

Long-term storage 9-1
Storing the engine in a non-operable condition for 3 months or more.....9-1
Preparation for storage 9-1
Maintenance during storage..... 9-1
Using the engine after storage 9-2
Storing the engine in an operable condition for 3 months or more.....9-2
Operating the engine for maintenance..... 9-2

Chapter 10
TRANSPORTATION

Lifting the engine..... 10-1

Chapter 11
TROUBLESHOOTING

General precautions..... 11-1
Contact a dealer of Mitsubishi Heavy Industries, Ltd. for repair service 11-1
Considerations before work 11-1
Cautions against contamination 11-1
Cautions regarding parts handling 11-1
Work safety 11-1
Troubleshooting 11-2
The starter does not crank or cranks slowly, resulting in start failure 11-2
The starter cranks, but the engine does not start 11-2
Output decrease..... 11-3
Exhaust smoke is white or blue..... 11-4
Exhaust smoke is black or charcoal..... 11-5
Fuel consumption is high 11-6
Engine oil consumption is high..... 11-7
Overheating..... 11-8
Low engine oil pressure 11-8
When fuel has run out..... 11-9

Chapter 12
MAIN SPECIFICATIONS

Main specifications..... 12-1

List of illustrations

Fig. 2-1 Engine left view 2-1
Fig. 2-2 Engine right view 2-1
Fig. 2-3 Engine left view 2-2
Fig. 2-4 Engine right view 2-2
Fig. 2-5 Engine left view 2-3
Fig. 2-6 Engine right view 2-3
Fig. 2-7 Starter switch..... 2-4
Fig. 2-8 Preheat indicator 2-4
Fig. 2-9 Water temperature meter and thermo unit..... 2-5
Fig. 2-10 Ammeter..... 2-5
Fig. 2-11 Hour meter 2-5
Fig. 2-12 Stop solenoid..... 2-6
Fig. 2-13 Oil pressure switch 2-7
Fig. 2-14 Thermo switch 2-7
Fig. 2-15 Air cleaner indicator..... 2-7
Fig. 3-1 Battery electrolyte level - Inspect 3-1
Fig. 3-2 Fuel tank oil level - Check 3-2
Fig. 3-3 Oil filler and Oil level gauge..... 3-2
Fig. 3-4 Radiator filler cap 3-3
Fig. 3-5 Radiator coolant level..... 3-3
Fig. 3-6 Reserve tank coolant level 3-3
Fig. 4-1 Recommended fuel 4-1
Fig. 5-1 Recommended engine oil..... 5-1
Fig. 5-2 Selection of oil viscosity 5-1
Fig. 6-1 GLASSY - LLC 6-1
Fig. 8-1 Belt and belt tension - Inspect and Adjust 8-1
Fig. 8-2 Fuel tank - Drain water 8-2
Fig. 8-3 Solenoid fuel pump filter - Inspect and clean..... 8-2
Fig. 8-4 Fuel filter element (switching cock type) - Bleed air..... 8-3
Fig. 8-5 Fuel filters (cartridge type) - Bleed air .. 8-3
Fig. 8-6 Water sedimenter - Bleed air..... 8-4
Fig. 8-7 Water sedimenter - Drain water 8-5
Fig. 8-8 Fuel filter (cartridge type) - Replace 8-5
Fig. 8-9 Fuel filter element (switching cock type) - Replace..... 8-6
Fig. 8-10 Solenoid fuel pump filter - Replace 8-6
Fig. 8-11 Engine oil drain plug.....8-7
Fig. 8-12 Engine oil - Refill 8-8
Fig. 8-13 Oil filter - Change 8-9
Fig. 8-14 Oil filter 8-9
Fig. 8-15 Radiator filler cap 8-10
Fig. 8-16 Coolant drain cock (radiator).....8-10
Fig. 8-17 Coolant drain plug (engine).....8-11
Fig. 8-18 Radiator coolant level.....8-12
Fig. 8-19 Reserve tank 8-12
Fig. 8-20 Radiator fins - Clean 8-13
Fig. 8-21 Air cleaner - Check.....8-14
Fig. 8-22 Turbocharger - Inspect.....8-14
Fig. 8-23 Pre-cleaner - Clean 8-15
Fig. 8-24 Air cleaner element - Remove.....8-16
Fig. 8-25 Air cleaner element - Clean and Check 8-16
Fig. 8-26 Air cleaner - Check.....8-16
Fig. 8-27 Battery electrolyte level - Inspect 8-17
Fig. 8-28 Specific gravity of battery electrolyte - Check.....8-17
Fig. 8-29 Starter - Inspect.....8-18
Fig. 8-30 Alternator - Inspect.....8-18
Fig. 10-1 Hangers.....10-1
Fig. 10-2 Engine's center of gravity (standard specification) 10-1

List of tables

Table 3-1 Preheat duration (automatic grow plug) 3-4
Table 3-2 Preheat duration (manual grow plug) ... 3-4
Table 3-3 Standard values at rated speed 3-6
Table 4-1 Recommended limit and use limit of fuel property 4-2
Table 5-1 Engine oil properties..... 5-4
Table 6-1 Water quality standards..... 6-1
Table 6-2 LLC specification 6-3
Table 6-3 Recommended LLC concentration..... 6-5
Table 7-1 Maintenance schedule 7-2
Table 8-1 Specific gravity of electrolyte..... 8-17
Table 9-1 Recommended rust-preventive oil and corrosion inhibitor 9-1
Table 11-1 The starter does not crank or cranks slowly, resulting in start failure 11-2
Table 11-2 The starter cranks, but the engine does not start..... 11-2
Table 11-3 Output decrease..... 11-3
Table 11-4 Exhaust smoke is white or blue..... 11-4
Table 11-5 Exhaust smoke is black or charcoal ... 11-5
Table 11-6 Fuel consumption is high..... 11-6
Table 11-7 Engine oil consumption is high..... 11-7
Table 11-8 Overheating..... 11-8
Table 11-9 Low engine oil pressure 11-8
Table 12-1 Main specifications..... 12-1

Chapter 1 BASIC SAFETY PRECAUTIONS

Fire and explosions

WARNING

Keep flames away

Do not use flames near the engine (in the engine room). Fuel vapor or other gas can catch fire and produce dangerous situations.

Wipe off spilled fuel, oil and LLC immediately and thoroughly. Spilled fuel, oil and LLC may ignite and cause a fire.

Store fuel and engine oil in a well-ventilated area. Make sure that the caps of fuel and engine oil containers are tightly closed.

Keep engine surrounding area tidy and clean

Do not leave combustible or explosive materials, such as fuel, engine oil and LLC, near the engine. Such substances can cause fire or explosion.

Remove dust, dirt and other foreign materials accumulated on the engine and surrounding parts thoroughly. Such materials can cause fire or the engine to overheat. In particular, clean the top surface of the battery thoroughly. Dust can cause a short-circuit.

Care for fuel, oil and exhaust gas leakage

If any fuel, oil or exhaust gas leakage is found, immediately take corrective measures to stop it.

Such leakages, if left uncorrected, can cause fuel or engine oil to reach hot engine surfaces or hot exhaust gas to contact flammable materials, possibly leading to personal injury and/or damage to equipment.

Use explosion-proof lighting apparatus

When inspecting fuel, engine oil, coolant, battery electrolyte, etc., use a flameproof light. An ordinary lighting apparatus may ignite gas and cause it to explode.

Prevent electrical wires from short-circuiting

Avoid inspecting or servicing the electrical system with the ground cable connected to the battery. Otherwise, a fire could result from short-circuiting. Be sure to disconnect the battery cable from the negative (-) terminal before beginning with the work procedure.

Short-circuits, possibly resulting in fire, may be caused by a loose terminal or damaged cable/wire. Inspect the terminals, cables and wires, and repair or replace the faulty parts before beginning with the service procedure.

Keep fire extinguishers and a first-aid kit handy

Keep fire extinguishers handy, and become familiar with their usage.

Keep a first-aid kit at the designated place where it is easily accessible by anyone at any time.

Establish response procedures to follow in the event of fire or accident. Provide an emergency evacuation route and contact points and means of communication in case of emergency.

Stay clear of all rotating and moving parts

WARNING

Install protective covers around rotating parts

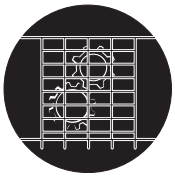

Make sure the protective covers of the engine are correctly installed. Repair any damaged or loose covers. Never remove the covers such as damper cover, camshaft cover, or rocker cover that enclose the revolving parts during operation.

When the engine is coupled to driven equipment, be sure to provide protective covers over the parts such as the connecting belts and couplings that are exposed.

Never remove protective covers.

Check work area for safety

Before starting the engine, make sure no one is near the engine and tools are not left on or near the engine. Verbally notify persons within the immediate area when starting the engine.

When the starter device is posted with a sign that prohibits startup operation, do not operate the engine.

Stay clear of moving parts while engine is running

Do not approach rotating or sliding parts of the engine while the engine is running. Keep objects likely to be caught by rotating parts away from such parts.

If any part of the clothing or outfitting is caught by a rotating part, serious bodily injuries could result.

Lockout and tagout

Be sure to lockout and tagout before starting inspection and maintenance.

Lockout and tagout are effective methods of cutting off machines and equipment from energy sources.

To accomplish the lockout/tagout, remove the starter switch key, set the battery switch to "OFF" position and attach a "Do Not Run" or similar caution tag to the starter switch.

The starter switch key must be kept by the person who performs inspection and maintenance during the work.

Keep engine stopped during servicing

Be sure to stop the engine before proceeding to inspection and service procedure. Never attempt to make adjustments on the engine parts while the engine is running.

Rotating parts such as belt can entangle your body and cause serious injuries.

Always restore engine turning tools after use

Be sure to remove all turning tools used during maintenance and inspection work. Remember also that the turning gear must be returned to the operating condition before starting the engine.

Starting the engine with the turning tools inserted or with the turning gear in engagement can lead to not only engine damage but also personal injuries.

Changing the engine speed setting is prohibited

Never change engine speed setting. Tampering with the setting can cause the engine and its coupled machine to operate at excessive speeds and result in accidents.

Be careful of exhaust fume poisoning

WARNING

Operate engine in a well-ventilated area

If the engine is installed in an enclosed area, and the exhaust gas is ducted outside, ensure that there is no exhaust gas leakage from duct joints.

When using the engine as portable generator set, do not run it in doors such as a warehouse or tunnel, or in an poorly-ventilated area near the shielding. When running it indoors by necessity, discharge the exhaust gas to outside and thoroughly ventilate the room.

Make sure the exhaust gas is not discharged directly to surrounding buildings, plants or living passersby.

Exhaust gas from the engine contains carbon monoxide and other harmful substances. Operating the engine in an poorly-ventilated area can produce gas poisoning.

Be careful of falling down

WARNING

Lift engine carefully

To lift the engine, use slings capable of supporting the weight of the engine.

Attach the wire rope to the hangers provided on the engine using a correct sling.

During lifting process, keep the engine in a well-balanced position by taking the center of gravity of the engine into consideration.

Keep the angle formed by slings attached to hangers within 60°. If the angle exceeds this limit, excessive load could be imposed on the hangers and this could damage the hangers and result in a serious accident.

If the wire rope contacts the engine directly, place a cloth or other soft padding to avoid damage to the engine and wire rope.

Do not climb onto the engine

Do not climb onto the engine, nor step on any engine parts located on the lateral sides.

To work on parts located on the upper section of engine, use a ladder, stool, etc., that was firmly secured.

Climbing on the engine may not only damage engine parts but also cause falling down from the engine and result in personal injuries.

Always prepare stable scaffold

When working on the upper part of the engine and other hard-to-reach places, use a stable work platform.

Standing on a decrepit stool or parts box may result in personal injury.

Do not place any unnecessary objects on a work platform.

Protect ears from noise

CAUTION

Wear ear plugs

Always wear ear plugs when entering the machine room (engine room). Combustion sound and mechanical noise generated by the engine can cause hearing problems.

Be careful of burns

CAUTION

Do not touch the engine during or immediately after operation

To avoid burns, do not touch the engine during or immediately after operation.
A hot engine can cause burns.
To conduct maintenance and inspection work, wait until the engine has cooled sufficiently by checking the temperature gauge.

Do not open the radiator filler cap when the engine is hot

Never open the radiator filler cap while the engine is running or immediately after the engine is stopped.
When opening the cap, stop the engine and allow the coolant temperature to lower sufficiently.
When opening the radiator filler cap, open slowly to discharge the pressure inside the tank. Also to avoid a risk of getting scalded by steam, wear thick rubber gloves or wrap a cloth around the cap.
When closing the cap, be sure to tighten securely.
The coolant is hot while engine is running and immediately after the engine stops. If the cap is opened when the coolant is at operating temperature, steam and hot coolant may blow out and result in burns.

Do not touch high pressure injection fuel

If fuel leaks or sprays out from the high pressure injection pipe, do not touch the fuel.
Fuel in the fuel injection pipes is under high pressure and if the fuel contact your skin, it goes into deep tissues and may result gangrene.

Refill coolant only after the coolant temperature dropped

When refilling of coolant, perform it after coolant temperature drops, not immediately after the engine is stopped. Otherwise you are scalded with hot coolant.

Be careful when handling fuel, engine oil or LLC

⚠ CAUTION

Use only specified fuel, engine oil and LLC

Use fuel, oil and LLC specified in this manual, and handle them carefully.

Use of any other fuel, oil or LLC, or improper handling may cause various engine problems and malfunctions.

Obtain the MSDS issued by the fuel, oil and LLC suppliers, and follow the directions in the MSDSs for proper handling.

Handle LLC carefully

When handling LLC, always wear rubber gloves and a protective face mask. If LLC or cooling water containing LLC comes into contact with your skin or eyes, or if it is swallowed, you would suffer from inflammation, irritation or poisoning.

Should LLC be accidentally swallowed, induce vomiting immediately and seek medical attention. Should LLC enter your eyes, flush them immediately with plenty of water and seek medical attention. If LLC splashes onto your skin or clothing, wash it away immediately with plenty of water.

Keep flames away from LLC. The LLC can catch flames, causing a fire. Coolant (containing LLC) drained from the engine is toxic. Never dispose of coolant into regular sewage. Abide by the applicable law and regulations when discarding drained coolant.

Proper disposal of waste oil, LLC and coolant

Do not discharge waste engine oil, LLC and coolant into sewerage, river, lake or other similar places. Such a way of disposal is strictly prohibited by laws and regulations.

Dispose of waste oil, LLC and coolant and other environmentally hazardous waste in accordance with the applicable law and regulations.

When abnormality occurs

⚠ CAUTION

Do not add coolant immediately after a sudden stop due to overheating

If the engine stops suddenly or if you have no choice but stop the engine suddenly due to overheating, do not add coolant immediately.

Adding water while the engine is hot can damage parts such as cylinder heads due to a sudden drop of temperature. Add coolant gradually after the engine has completely cooled.

Avoid immediate restart after abnormal stop

If the engine stops abnormally, do not restart the engine immediately. If the engine stops with an alarm, check and remedy the cause of the problem before restarting. Sustained use of the engine without any remedy could result in serious engine problems.

Avoid continuous engine operation at low oil pressure

If an abnormal engine oil pressure drop is indicated, stop the engine immediately, and inspect the lubrication system to locate the cause. Continuous engine operation with low oil pressure could cause bearings and other parts to seize.

If belt breaks, stop engine immediately

If the belt breaks, stop the engine immediately. Continuous engine operation with the broken belt could cause the engine to overheat and thereby the coolant to boil into steam, which may gush out from the reserve tank or radiator, and you may be scalded with it.

Service battery

⚠ CAUTION

Handle the battery correctly

- Never use flames or allow sparks to generate near the battery. The battery releases flammable hydrogen gas and oxygen gas. Any flames or sparks in the vicinity could cause an explosion.
- Do not use the battery when the battery electrolyte level of which is below "LOWER LEVEL" line. Sustained use of the battery could result in an explosion.
- Do not short the battery terminals with a tool or other metal object.
- When removing battery, always remove the plug from the negative (-) terminal first. When connecting battery, always connect the plug to the positive (+) terminal first.
- Remove all plugs, then charge the battery in a well-ventilated area.
- Make sure the cable clamps are securely installed on the battery terminals. A loose cable clamp can cause sparks that may result in an explosion.
- Before servicing electrical components or conducting electric welding, set the battery switch to the "Open/OFF" position or remove the plug from the negative (-) terminal to cut off the electrical current.
- Battery electrolyte contains dilute sulfuric acid. Careless handling of the battery can cause the loss of sight and/or skin burns. Also, do not consume the battery electrolyte.
- Wear protective goggles and rubber gloves when working with the battery (when adding water, charging, etc.)
- If battery electrolyte is spilled onto the skin or clothing, immediately wash it away with lots of water. Use soap to thoroughly clean.
- The battery electrolyte can cause the loss of sight if splashing into the eyes. If it gets into the eyes, immediately flush it away with plenty of clean water, and seek immediate medical attention.
- If the battery electrolyte is accidentally consumed, gargle with plenty of water, then drink lots of water, and seek immediate medical attention.

Other cautions

⚠ CAUTION

Never modify engine

Unauthorized modification of the engine will void our warranty.
Modification of the engine may not only cause engine damage but also produce personal injuries.
If there is a need to modify the engine, contact a dealer of Mitsubishi Heavy Industries, Ltd.

Observe safety rules at work site

Observe the safety rules established at your workplace when operating and maintaining the engine.
Do not operate the engine if you are feeling ill, inform your supervisor of your condition. Operation of the engine with reduced awareness may cause improper operation that could result in accidents.
When working in a team for two or more people, use specified hand signals to communicate among workers.

Work clothing and protective gear

Wear a hardhat, face shield, safety shoes, dust mask, gloves and other protective gear as needed. When handling compressed air, wear safety goggles, a hardhat, gloves and other necessary protective gear.
Works without wearing proper protective gear could result in serious injuries.

Never break seals

To ensure proper engine operation, the fuel control linkage is sealed to prevent accidental change of the injection volume and rotation speed settings. Operating the engine without these seals in place can cause problems described below, and also invalidates the warranty.

- Rapid wear of sliding and rotating parts
- Engine damage such as seizing of engine parts
- Considerably increased consumption of fuel and lubricating oil
- Degradation of engine performance due to improper balance between fuel injection volume and governor operation or overrunning of the engine which could result in a serious accident

Perform all specified pre-operation inspections and periodic inspections

Conduct the pre-operation inspections and periodic inspections as described in this manual.
Failure to conduct the specified inspections may cause various engine problems, damage to parts, and serious accidents.

Break-in the engine

To break-in new engines or overhauled engines, operate the engine at a speed lower than the rated speed in a light load condition during the first 50 hours of operation.
Operating new engines or overhauled engines in a severe condition during the break-in period shortens the service life of the engine.

Warm up the engine before use

After starting the engine, run the engine at low idling speeds for 5 to 10 minutes for warm up. Start the work after this operation is completed. Warm up operation circulates the lubricant through the engine. Therefore, individual engine parts are well lubricated before they are subjected to heavy loads.
Warm up operation circulates lubricants in the engine and contributes to a longer service life and economical operation.
Do not conduct warm up operation for prolonged period of time. Prolonged warm up operation causes carbon build-up in the cylinders that leads to incomplete combustion.

Never operate the engine in an overloaded condition

If the engine shows an overloaded condition such as black exhaust smoke, reduce the load immediately to operate the engine at an appropriate output and load.
Overloading causes not only high fuel consumption but also excessive carbon deposits inside the engine.
Carbon deposits cause various problems and will shorten the service life of the engine.

Conduct cooling operation before stopping the engine

Before stopping the engine, let it idle in low gear for 5 to 6 minutes to cool down.
Stopping the engine immediately after high-load operation will cause engine parts to heat up and shorten the service life of the engine.
During cooling operation, check the engine for abnormalities.

Protection of the engine against water entry

Do not allow rainwater, etc. to enter the engine through the air inlet or exhaust openings.
Do not wash the engine while it is operating. Cleaning fluid (water) can be sucked into the engine.
Starting the engine with water inside the combustion chambers can cause the water hammer action which may result in internal engine damage and serious accidents.

Properly maintain the air cleaner and pre-cleaner

Maintain the engine with air cleaner or pre-cleaner according to the following instructions.

- Do not maintain the air cleaner or pre-cleaner while the engine is running. The turbocharger may suck particles of foreign materials into the engine and could result in serious accidents.
- Remove the air cleaner or pre-cleaner slowly to prevent foreign materials accumulated on the element from falling off. After removing the air cleaner or pre-cleaner, immediately cover the opening (inlet port of air cleaner; port in body for pre-cleaner) with plastic sheet or similar means to prevent foreign materials from entering the engine.
- Clean the pre-cleaner periodically. The pre-cleaner clogging can cause insufficient intake air or increasing in the exhaust temperature.
- If the engine is equipped with a dust indicator, conduct maintenance when the clog warning sign appears.

Use of tools optimum for each work

Always keep in mind to select most appropriate tools for the work to be performed and use them correctly. If tools are damaged, replace them with new tools.

Avoidance of prolonged time of starter operation

Do not use the starter for more than 10 seconds at a time. If the engine does not start, wait for at least 1 minute before cranking again.
Continuous operation of the starter will drain the battery power and cause the starter to seize.

Do not turn off the battery switch during operation

Do not turn off the battery switch during operation.
If the battery switch is turned OFF when the engine is running, not only various meters will stop working but also the alternator may have its diode and transistor deteriorated.

Cautionary instructions for transporting the engine

When transporting the engine on a truck, consider the engine weight, width and height to ensure safety.
Abide by road traffic law, road vehicles act, vehicle restriction ordinance and other pertinent laws.

Engine external diagrams

The external diagram is for the standard type of the engine. The installed equipment and shapes differ according to the engine type.

S3L, S3L2 left view

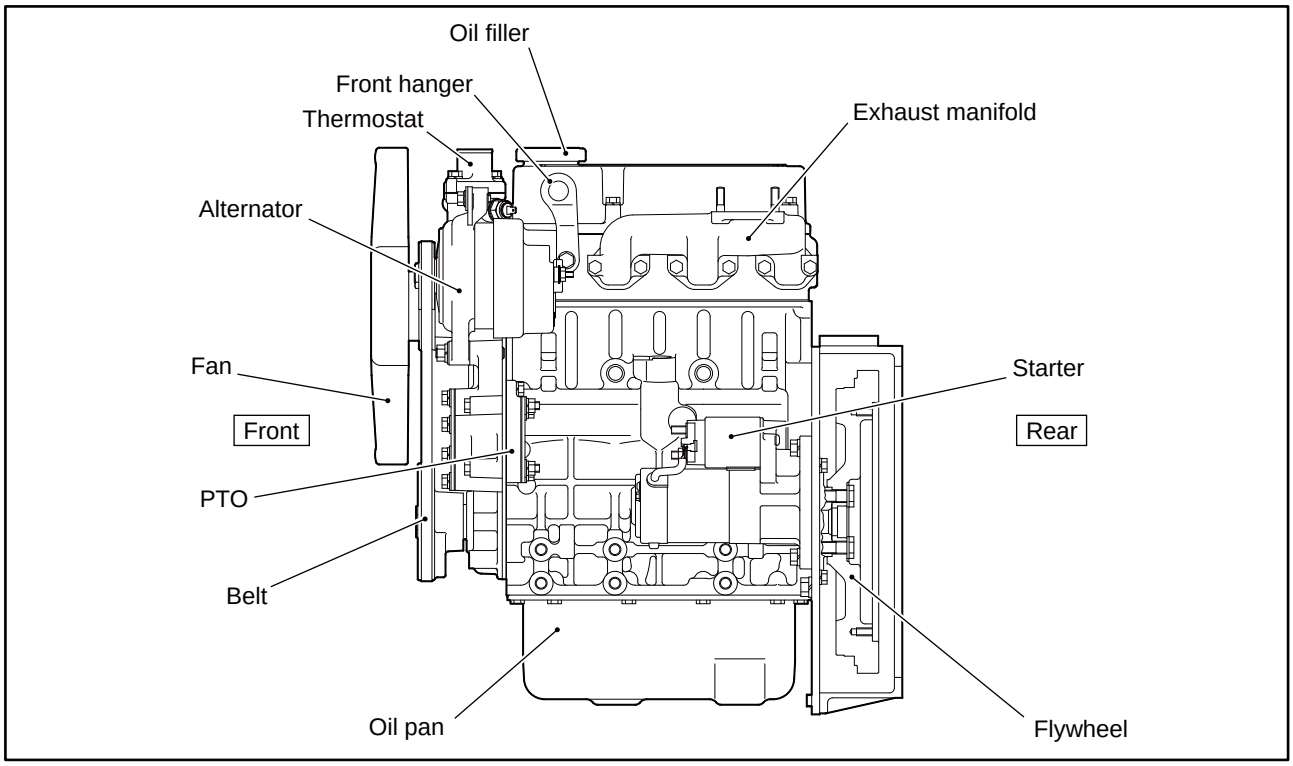

Fig. 2-1 Engine left view

S3L, S3L2 right view

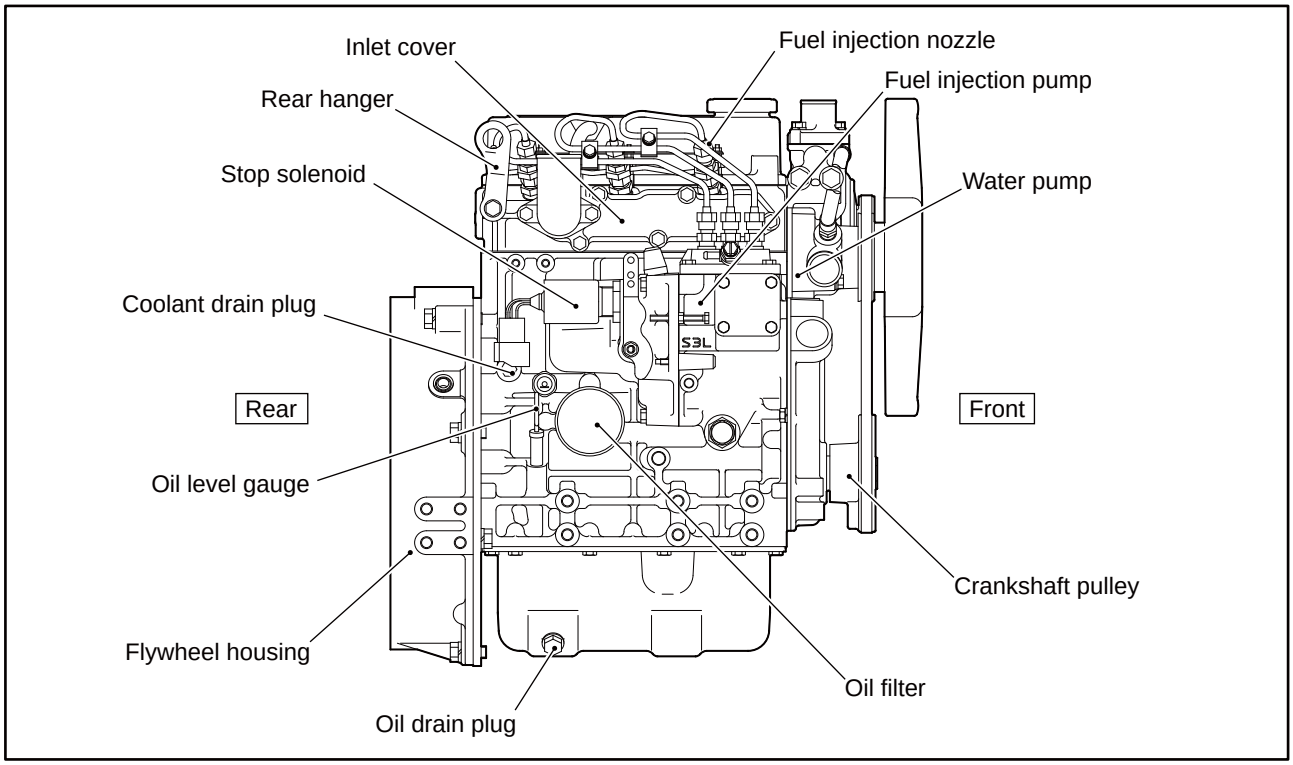

Fig. 2-2 Engine right view

S4L, S4L2 left view

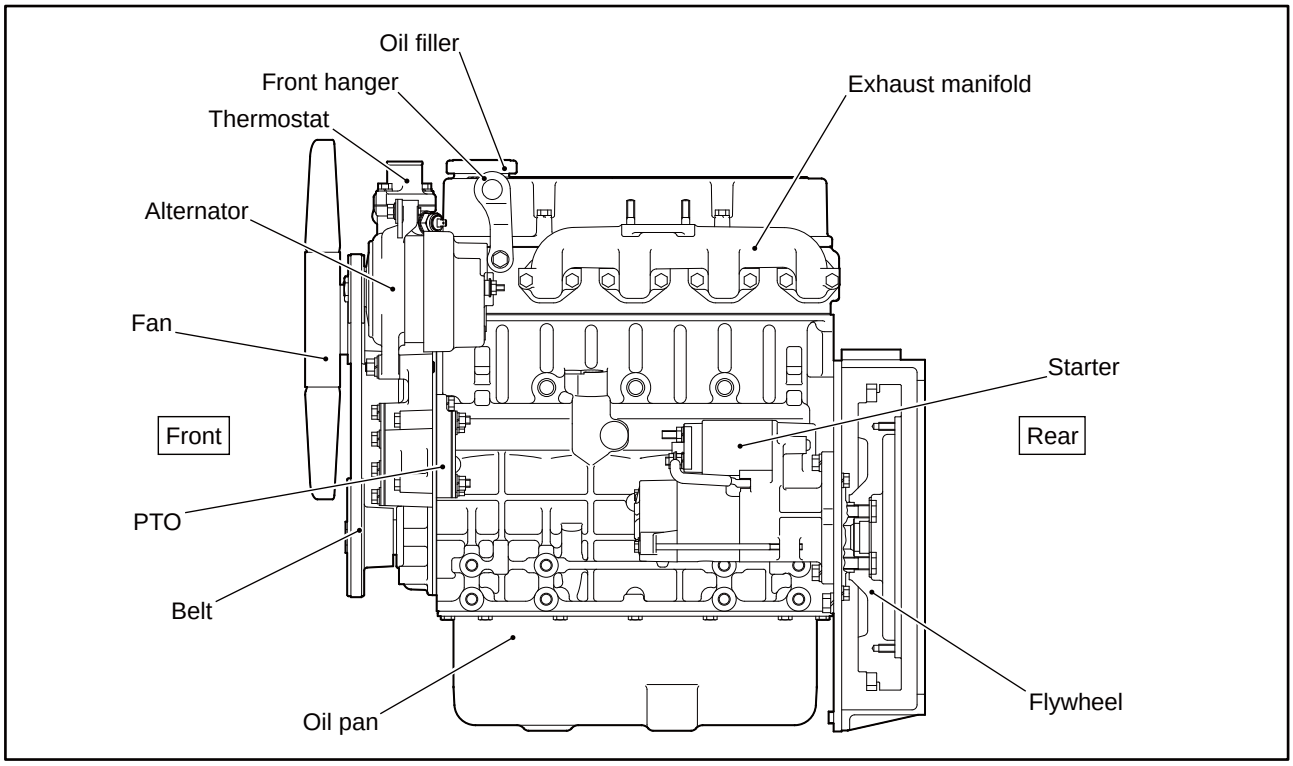

Fig. 2-3 Engine left view

S4L, S4L2 right view

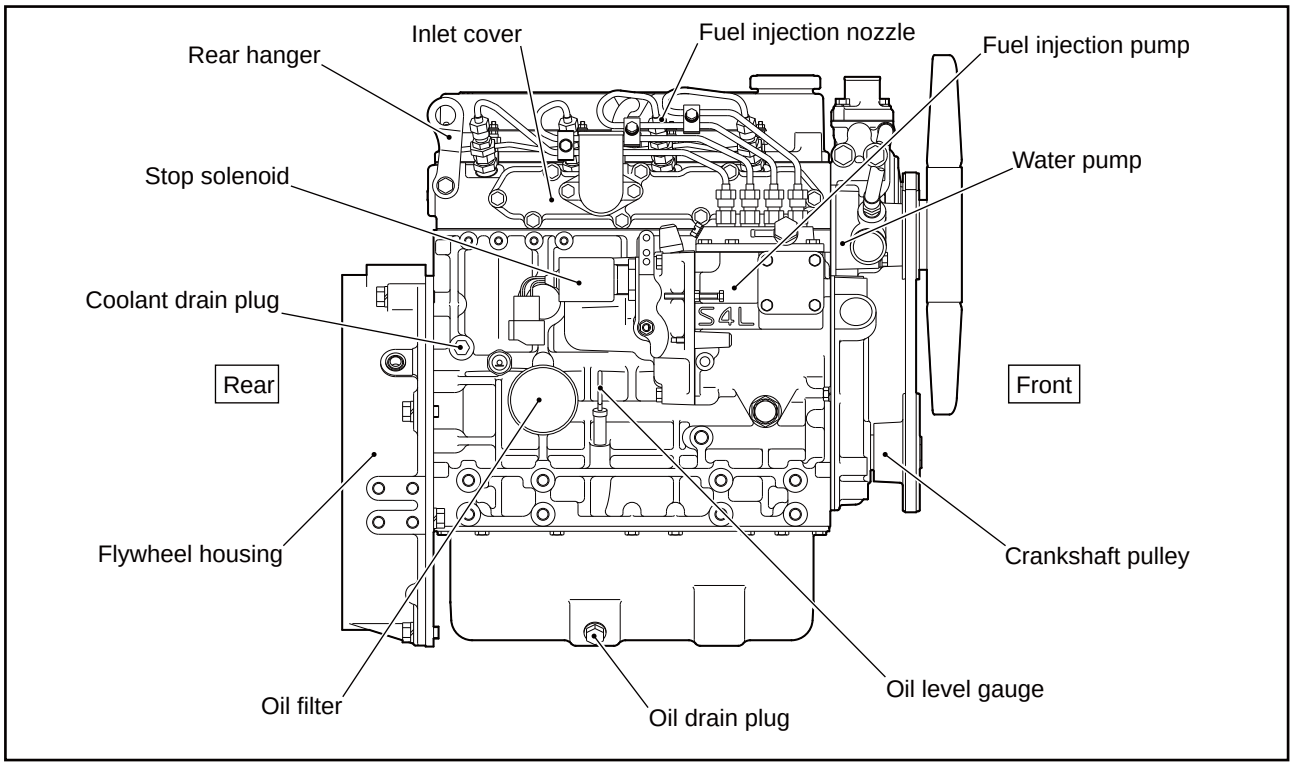

Fig. 2-4 Engine right view

S4L2-T left view

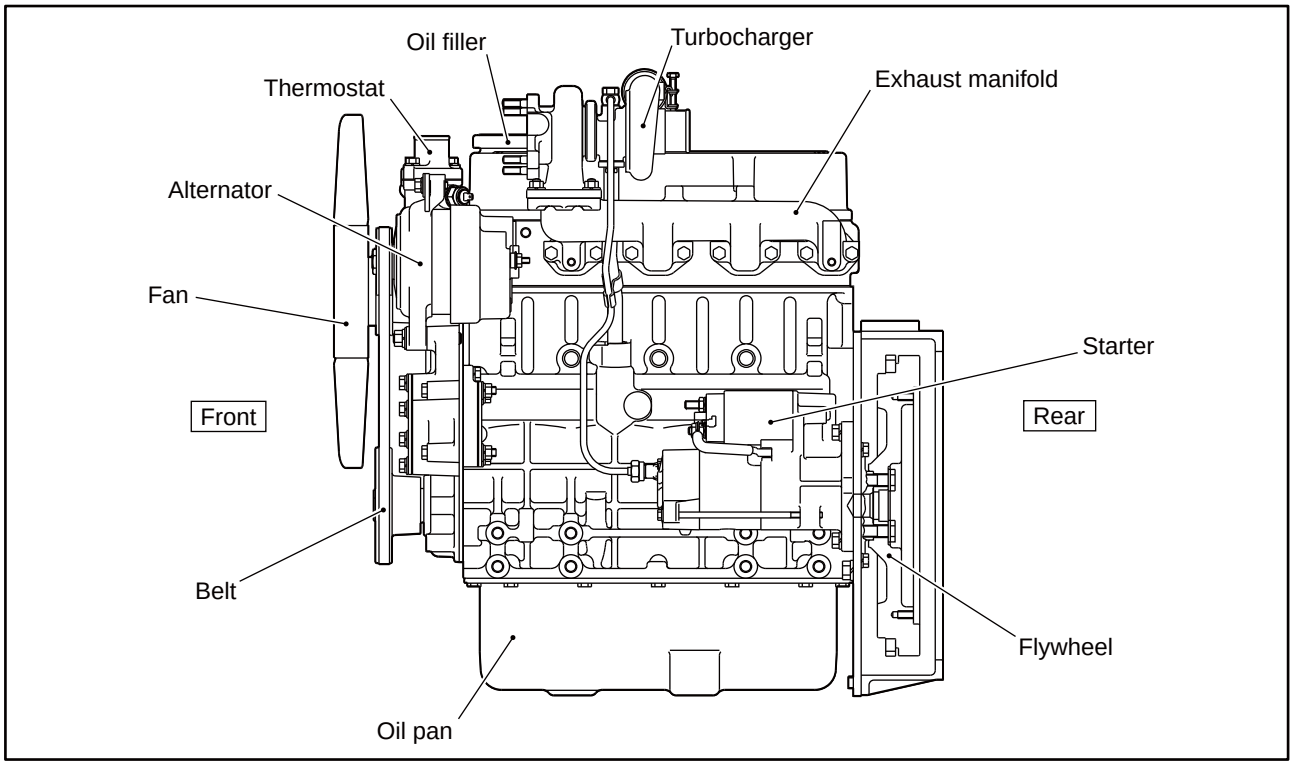

Fig. 2-5 Engine left view

S4L2-T right view

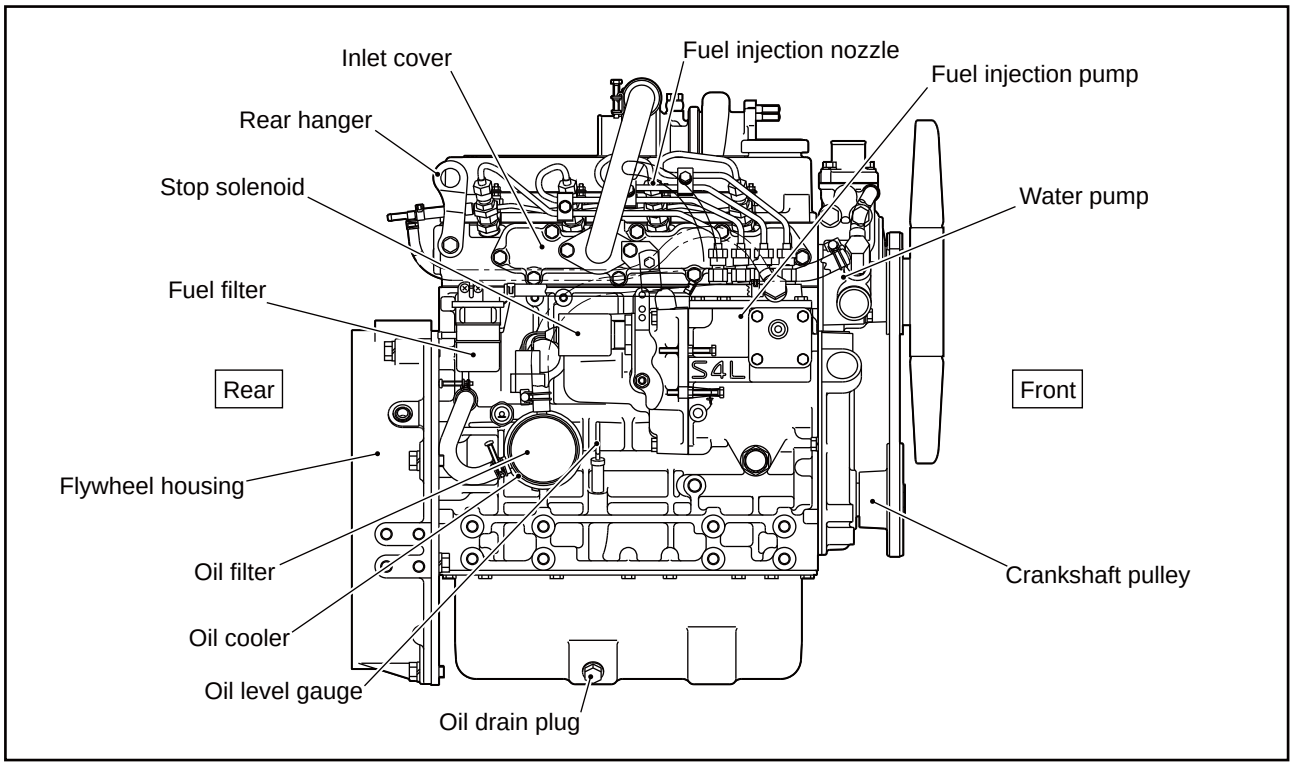

Fig. 2-6 Engine right view

Equipment and instrument

The installed equipment and shapes differ on the engine type.

Starter switch

The starter switch is used to start the engine.

HEAT

When the key is turned to this position, the glow plugs become hot and allow easy startup of a cold engine.

OFF

When the key is turned to this position, power supply to the electric circuits is cut off, and the key can be removed and inserted at this position. To sotp engine, turn the key to this position.

ON

When the key is at this position, power is supplied to the electric circuits. After the engine starts, the key is set to this position.

START

When the key is turned to this position, the starter cranks the engine and the engine starts. When the key is released, ti automatically returns to the "ON" position.

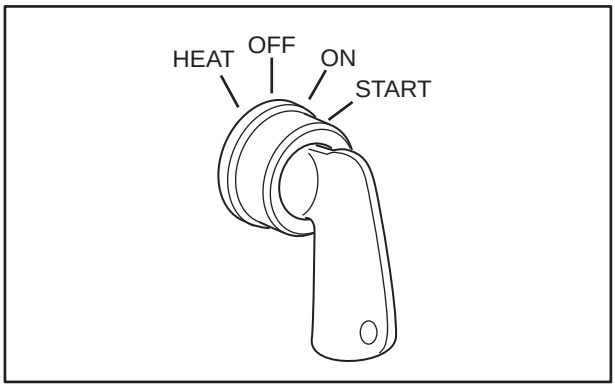

Fig. 2-7 Starter switch

Preheat indicator

The preheat indicator shows the condition of the glow plugs.

Automatic glow type

The preheat lamp is on during the set periods of the glow timer, and off when the preheating is completed.

Manual glow type

The glow signal turns red to indicate the preheating condition as the glow plug is heated.

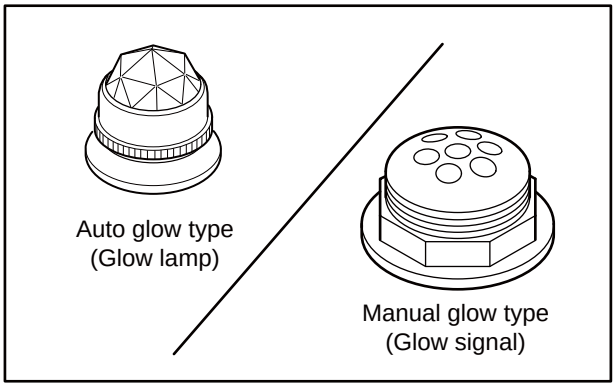

Fig. 2-8 Preheat indicator

Water temperature meter and thermo unit

The engine coolant temperature detected by the thermo unit is displayed by the water temperature meter.
When the water temperature meter shows 95°C [203°F], idle the engine in low gear until the temperature becomes normal. After the temperature becomes normal, perform cooling operation for 5 or 6 minutes and then inspect the cooling system.

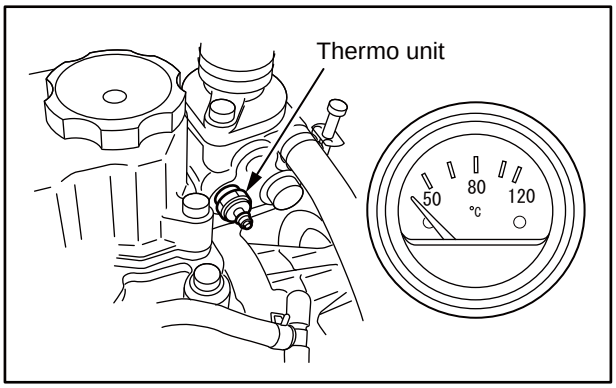

Fig. 2-9 Water temperature meter and thermo unit

Ammeter

It indicates the battery charging condition while the engine is running.
When the battery is charged, the pointer swings to the positive (+) side. When the battery is discharged, the pointer swings negative (-) side.

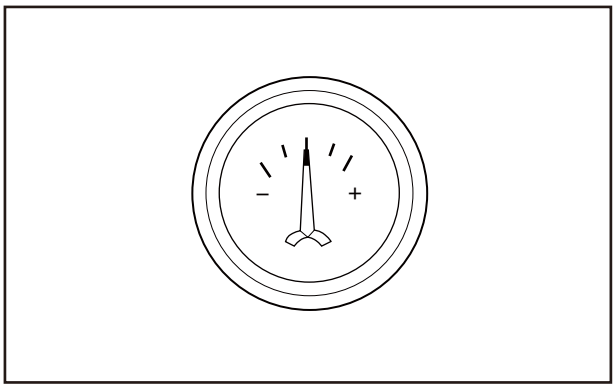

Fig. 2-10 Ammeter

Hour meter

It indicates the operating time of the engine.
When performing the periodic inspection and maintenance, check the time interval with this meter.

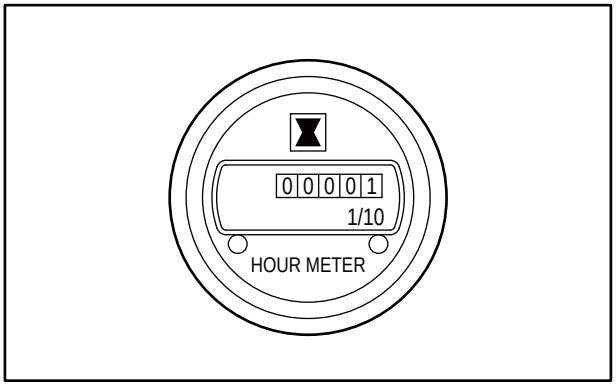

Fig. 2-11 Hour meter

Stop solenoid

The stop solenoid operates for normal shutdown of engine operation.

The stop solenoid moves the rack of fuel injection pump to cut the fuel, and consequently stops the engine.

Two types of stop solenoids are available.

RUN OFF (ETS: Energized To Stop) type

Not energized while the engine is running. Energized by a stop signal to stop the engine.

RUN ON (ETR: Energized To Run) type

Energized while the engine is running, and de-energized to stop the engine.

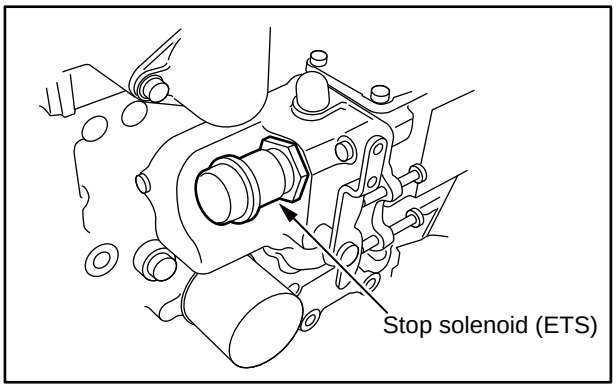

Fig. 2-12 Stop solenoid

Engine protection devices

The engine protection device is a device to prevent the engine from the accident by generating the alarm when abnormality occurs. Stop the engine if the protection device is activated, investigate the cause of abnormality and restore it. When the cause of abnormality is unknown, contact a dealer of Mitsubishi Heavy Industries, Ltd. The installed protection devices, type (set value) or shapes varies according to the specifications.

Oil pressure switch

The oil pressure switch activates the alarm system or stops the engine suddenly when the engine oil pressure becomes abnormally low.

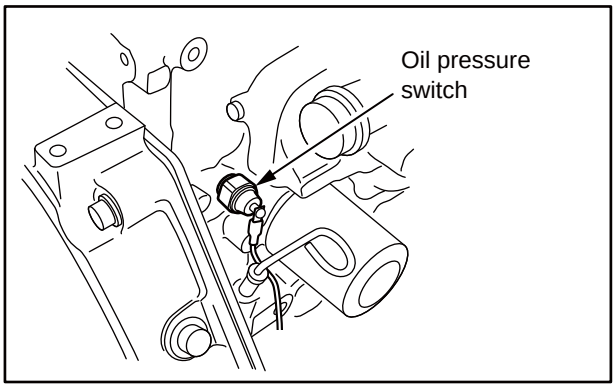

Fig. 2-13 Oil pressure switch

Thermo switch

The oil pressure switch generates an alarm when the engine coolant temperature becomes high and reaches the specified temperature.

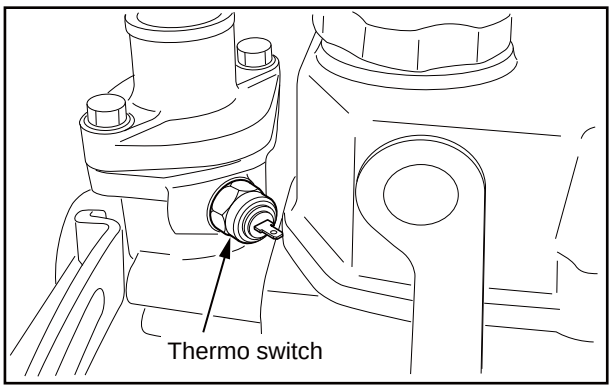

Fig. 2-14 Thermo switch

Air cleaner indicator

The air cleaner indicator alarms with its red signal when air cleaner elements become clogged, the difference in pressure between front air cleaner and rear air cleaner, and reaches the specified value. The signal indicates only, and does not generate an alarm, Therefore, the periodic visually inspection is needed. Press the reset button on the top of air cleaner indicator and restore the signal after cleaned the air cleaner indicator or replaced with a new one.

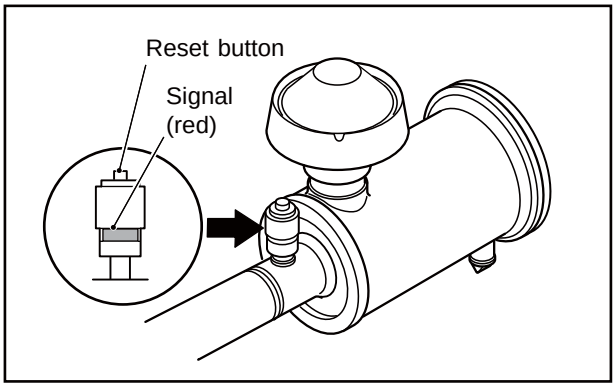

Fig. 2-15 Air cleaner indicator

Preparations for operation

⚠ CAUTION

Should an engine abnormality be observed during operation, stop the engine and correct the problem, or contact a dealer of Mitsubishi Heavy Industries, Ltd.

Always conduct the following inspection before starting the engine.

Engine external - Inspect

⚠ CAUTION

Be sure to keep combustible materials away from the engine, especially from the hot engine parts such as exhaust manifolds, or the battery. Check for fuel and oil leakage. Clean the top surface of the battery. A fire can be caused by combustible materials placed near hot engine parts. If any abnormality is found, be sure to repair it or contact a dealer of Mitsubishi Heavy Industries, Ltd.

Inspect the engine exterior as described below.

1. Make sure there is no combustible material near the engine or battery. Also, check to make sure that the engine and battery are clean. If combustible materials or dust are found near the engine or battery, remove them.
2. Check the electrical wiring for such components as the starter and alternator for looseness.
3. Check the entire engine for fuel leakage, engine oil or coolant. If leakages are found, repair or contact a dealer of Mitsubishi Heavy Industries, Ltd.
4. Make sure the following valves, plugs and cocks are open or closed (tightened) properly:
   - Fuel feed valve: Open
   - Coolant drain cock (plug): Closed (Tightened)
   - Oil drain valve: Closed

Battery electrolyte level - Inspect

⚠ CAUTION

If battery electrolyte is spilled on your skin or clothes, flush immediately with plenty of water. If battery electrolyte get into your eyes, flush them immediately with plenty of water and then get medical attention.

Do not use open flames or other fire hazards near the battery. When handling the battery, be careful of sparks generated by accidental shorting. For other cautions in handling the battery, refer to "Service battery" (1-6).

Battery electrolyte evaporates during use and the electrolyte level gradually decreases. Proper electrolyte surface level is between the "LOWER LEVEL" and "UPPER LEVEL" lines.

For the battery without level lines, proper electrolyte surface level is about 10 to 15 mm [0.394 to 0.591 in.] above the top of the plates.

If the electrolyte level is low, remove the caps and add distilled water to the proper level.

Note: When adding distilled water, pour in carefully.

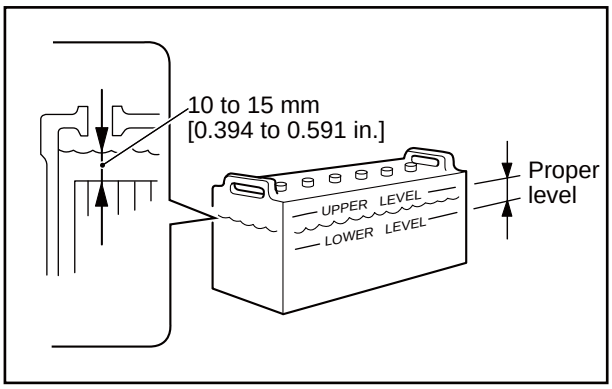

Fig. 3-1 Battery electrolyte level - Inspect

Fuel tank oil level - Check

WARNING

When working around fuel, make sure there are no open flames, heaters or other fire hazards.
Wipe off any spilled fuel completely. Spilled fuel can ignite and cause a fire.

CAUTION

Do not remove the strainer when filling the fuel tank.
For fuel to be used, refer to "FUEL" (4-1).

Make sure the fuel tank is full.
If the fuel level is low, refill the tank to the "FULL" level line.

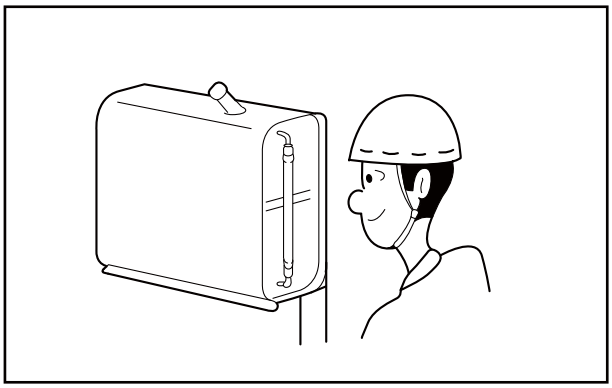

Fig. 3-2 Fuel tank oil level - Check

Engine oil level - Check

CAUTION

For engine oil to be used, refer to "ENGINE OIL" (5-1).

1. Pull out the oil level gauge and wipe it clean using a waste cloth.
2. Insert the oil level gauge fully into the oil level gauge guide, then pull out the gauge again.
3. The proper oil level is between the high and low marks on the oil level gauge. If the oil level is low, add engine oil of the specified type.
4. Install the oil filler cap after refilling.
5. Check the oil pan and other area for oil leakage.

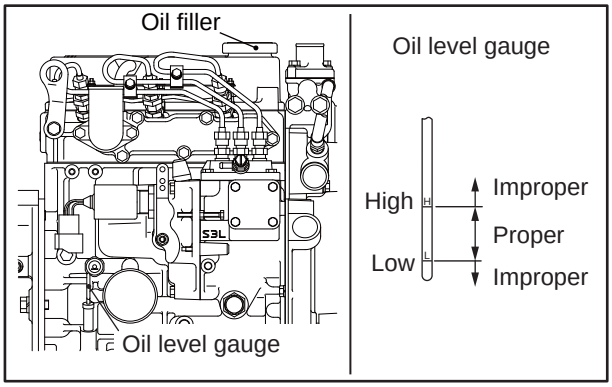

Fig. 3-3 Oil filler and Oil level gauge

Coolant level - Check

WARNING

Remove the radiator filler cap only after the engine has cooled to room temperature. Place a waste cloth over the cap, and loosen the cap about a half-turn or stand the lever to the upright position to release internal pressure. Never open the radiator filler cap while the engine is hot, otherwise the steam or hot coolant spurts out and you may be scald with it.

1. Open the radiator filler cap and check the coolant level.
2. If the coolant level is low, add coolant to the specified level.

CAUTION

Always use the coolant with the same LLC concentration.

Note: Determine the quantities of LLC based on the coolant capacity and the LLC concentration chart.
For the coolant, refer to "COOLANT" (6-1). For the coolant capacity, refer to "MAIN SPECIFICATIONS" (12-1).

3. If a reserve tank is equipped, fill the reserve tank with coolant up to the "FULL" level line.

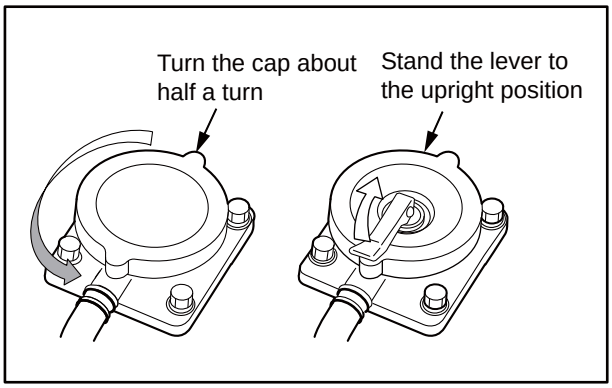

Fig. 3-4 Radiator filler cap

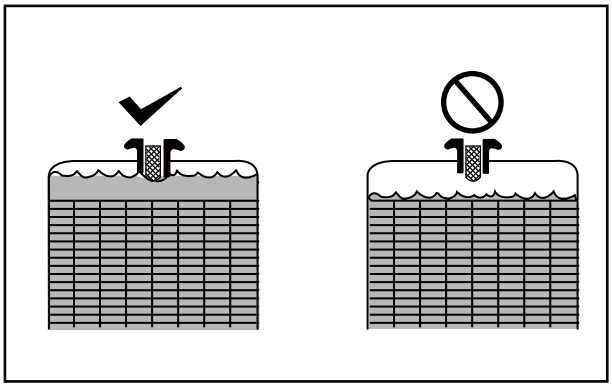

Fig. 3-5 Radiator coolant level

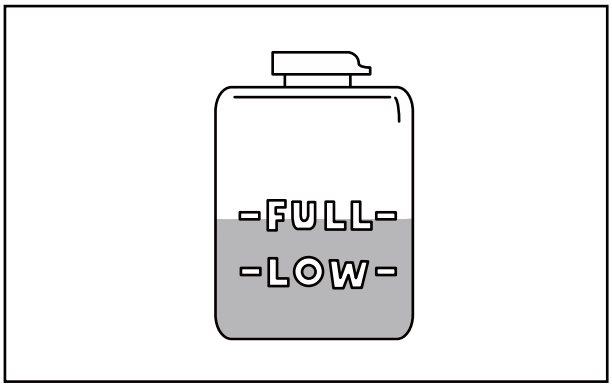

Fig. 3-6 Reserve tank coolant level

Starting

The starting method changes based on the application and specifications.Start the engine according to the specified procedure.

⚠ WARNING

Before starting the engine, check to make sure no one is near the engine and that tools are not left on or near the engine.In a loud voice, notify people in the area when starting the engine.

CAUTION

Do not apply a load to the engine at starting. (Disengage the clutch if installed.)
Continuous operation of the starter will drain the battery power and cause the starter to seize. Do not use the starter for more than 10 seconds at a time. When the engine does not start, wait for more than 1 minute before cranking again.
When preheating, do not heat over 30 seconds at a time (For manual glow plug). Otherwise the battery capacity reduce in a short time or decrease glow plug life.

Automatic glow plug

1. Turn the starter key to "ON" position. Confirm the oil pressure lamp, water temperature lamp, battery charge lamp and preheat lamps turn on at the time. The preheat lamp lighting duration is as follows:

Note: When the engine is cold, move the speed control lever to "FULL" position and turn the starter switch key to "ON" position.

Table 3-1 Preheat duration (automatic grow plug)

Specifications	Water temperature	Preheat duration
Quick type (bimaterial)	Low water temperature (5°C [41°F] or below)	Approx. 3 seconds
	High water temperature (5°C [41°F] or above)	Approx. 1 seconds
Standard type	Any time	Approx. 6 or 10 seconds

2. After the preheat lamp goes off, turn the starter key to "START" position and start up the engine. The preheat lamp turns on at "START" position as well.
3. Release your hand from the key when the engine starts up. The key returns to "ON" (operating) position automatically.

Manual glow plug

1. Turn the starter key to "HEAT" position. The preheat duration is as follows;

Table 3-2 Preheat duration (manual grow plug)

Ambient temperature	Preheat duration
+5°C [41°F] or higher	Approx. 10 seconds
-5°C [23°F] or higher, less than +5°C [41°F]	Approx. 15 seconds
less than -5°C [41°F]	Approx. 20 seconds

2. After the preheat lamp glows, turn the starter key to "START" position and start up the engine.
3. Release your hand from the key when the engine starts up. The key returns to "ON" (operating) position automatically.

Warm up operation

WARNING

Do not approach rotating parts during operation. Entanglement by rotating parts can cause serious injury.

After the engine starts, operate the engine in a no load condition at low idling speed for 5 to 10 minutes to warm up the engine.

Checking engine oil pressure

During warm up operation, check if the oil pressure is in the range of standard value (0.15 MPa {1.5 kgf/cm^2} [21 psi] or more).

Also, make sure the oil pressure gauge is operating properly.

Note: The oil pressure gauge may indicate a higher level than normal level immediately after the engine starts, due to the low oil temperature. The pressure gradually lowers to the normal level as the oil temperature rises.

External inspection during warm up

Visually check the external view of the engine for fuel, engine oil and coolant leakage, or exhaust gas leakage from joints.

Operation

Cautions when operating

⚠ WARNING

Do not approach rotating parts during operation. Entanglement by rotating parts can cause serious injury.

⚠ CAUTION

Do not touch any hot part of the engine such as exhaust pipes during operation or immediately after shut down. A hot engine can cause burns.

CAUTION

Always provide adequate ventilation in the engine room. If air supply to the engine room is not sufficient, the room temperature rises and can affect engine output and performance.

For the first 50 hours, operate the engine under a light load for break-in operation. Operating the engine under heavy load or severe conditions during the break-in period can shorten the service life of the engine.

Do not turn the battery switch to "OFF" position when the engine is running. Turning off the battery switch during operation not only stops the instrument operations but also may deteriorate the alternator diode and regulator.

Never turn the key to the "START" position during operation. The starter may be damaged.

When operating the engine with a 30 % of rated load or lower, limit each operation to an hour. Prolonged warm up operation causes carbon build-up in the cylinders that leads to incomplete combustion. Operate the engine with a 30 % of rated load or more for over 5 minutes after continuous operation for an hour to prevent causing carbon build-up.

Inspection during operation

Carefully check the exterior of engine such as piping joints for leaks.

Check for abnormal engine noises or vibrations such as knocking.

Check the color of exhaust gas from the exhaust muffler.

Check the instruments and gauges for proper operation and make sure they indicates normal values.

Table 3-3 Standard values at rated speed

Item	Standard
Engine oil pressure	0.29 to 0.49 MPa {3 to 5 kgf/cm^2} [43 to 71 psi]
Coolant temperature	70 to 90°C [158 to 194°F]

Note: (a) When the oil pressure drops below 0.15 MPa {1.5 kgf/cm^2} [21 psi] in normal operation, or below 0.05 MPa {0.5 kgf/cm^2} [7 psi] at low idling, stop the engine immediately.
Be sure to locate the cause of problem and correct it before restarting the engine.

(b) When the thermo switch is activated in normal run, idle the engine in low gear immediately until the engine temperature becomes normal. Then, perform cooling operation for 5 or 6 minutes before stopping the engine.Be sure to locate the cause of problem and correct it before restarting the engine.

Stopping

⚠ CAUTION

Stopping the engine abruptly while engine parts are hot due to high-speed operation can be a cause for heat up of the engine parts and shorten the engine life. Before stopping the engine, idle the engine in low gear immediately until the engine temperature becomes normal except in an emergency. Then, perform cooling operation for 5 or 6 minutes before stopping the engine and inspect the whole engine.
Never accelerate the engine immediately before shutting it down.
Do not restart the engine immediately after abnormal shut down. When the engine stops with alarms, be sure to locate the cause of the problem and correct the problem before restarting the engine. After restarting the operation, inspect the whole engine for any abnormalities again. If the engine has an abnormality, repair it immediately.

Engine stopping method may differ depending on the specifications.
Follow the instructions according to the specifications of the equipment.

Inspection after stopping

Inspect the engine for fuel, oil or coolant leakage. If any leakage is found, repair the leakage or contact a dealer of Mitsubishi Heavy Industries, Ltd.

Recommended fuel

WARNING

Use a fuel specified in this manual only. Do not refill the fuel tank more than the specified level, as it may result in a fire.

Use a diesel fuel equivalent for "JIS K 2204 diasel fuel".
It is necessary to use a fuel that has a pour point suitable for the ambient temperature.

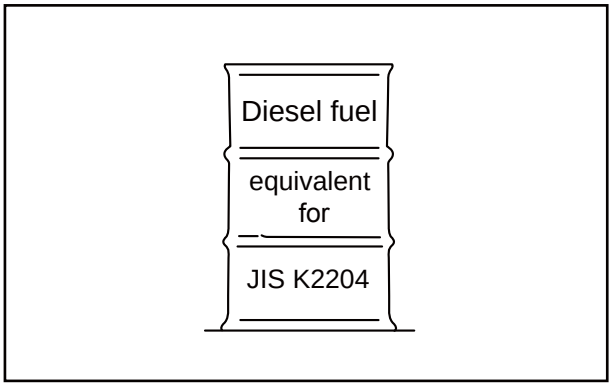

Fig. 4-1 Recommended fuel

Handling fuel

When using fuel stored in a storage tank, leave it to sit for more than 24 hours so that dust and water can settle at the bottom. Then, use the upper clean fuel.
Fill up the fuel tank or service tank after each operation.
This prevents water from mixing with fuel in the tank and also gives time for dust and water to separate and settle at the bottom of the tank.
Before refilling, clean the areas around the caps thoroughly and remove the caps from the drum and tank. Also clean your hands and the hose before refueling. When using a hand-operated pump, be careful not to pump water or sediment accumulated at the bottom of the storage tank.
Be sure to use a strainer when filling fuel tank. For a complete filtration, it is recommended to use a clean lint-free cloth together with the strainer.

Table 4-1 Recommended limit and use limit of fuel property

Properties		Recommended limits	Use limits	Test method
Flash point		50°C [122°F] or higher	45°C [113°F]	JIS K 2265:2007 ISO 3769 ISO 2719
Distillation	Initial boiling point	170°C [338°F] or higher		JIS K 2254:1998 ISO 3405
	90 % distillate temperature	330 to 380°C [626 to 716°F]		
Pour point (PP)		6°C [42.8°F] or lower than ambient temperature		JIS K 2269:1987 ISO 3016
Cloud point (CP)		Below ambient temperature		JIS K 2269:1987 ISO 3015
Cold filter plugging point (CFPP)		3 °C [37.4 °F] or lower than ambient temperature		JIS K 2288:2000 IP 309/96
Carbon residue (10 % bottom oil)		0.1 weight % or lower	0.4 weight % or lower	JIS K 2270:2000 ISO 6615 ISO 10370
Cetane number		45 or higher	40 or higher	JIS K 2280:1996 ISO 5165
Cetane index (new type)		45 or higher	40 or higher	JIS K 2280:1996 ISO/DIS 4264
Kinematic viscosity		2.0 mm^2/s [0.0031 in^2/s] or more at 30 °C [86 °F] 8.0 mm^2/s [0.0124 in^2/s] or more at 30 °C [86 °F]		JIS K 2283:2000 ISO 3104
Sulfur content		0.2 weight % or lower (Except in cases the value is specified by the emission control.)		JIS K 2541:2003 (The content should be as low as the diesel fuel.) ISO 4260 ISO 8754
Water content and sediment		0.1 volume % or lower		JIS K 2275:1996 ISO 3733
Ash content		0.01 % by mass or less	0.03 weight % or lower	JIS K 2272:1998 ISO 6245
Copper corrosion (3 hrs at 50 °C [122 °F])		Color change = Copper plate No.3 or less		JIS K 2513:2000 ISO 2160
Density at 15 °C [59 °F]		0.83 to 0.87 g/cm^3 [49.9424 to 54.3123 lb/ft^3]	0.80 to 0.87 g/cm^3 [49.9424 to 54.3123 lb/ft^3]	JIS K 2249:1995 ISO 3675
Caulking	24 hrs at 250 °C [482 °F]	75 % carbonization or less	80 % carbonization or less	Fed 791B
	24 hrs at 230 °C [446 °F]	55 % carbonization or less	-	
	48 hrs at 180 °C [356 °F]	Tar-free	-	
Aromatics substances (by HPLC)		35 % by volume or less (total of aromatic components)		JIS K 2536:2003 ISO 3837
Polycyclic aromatic content		8 % by volume or less		JIS K 2536:2003 IP 391
Asphaltene		0.1 weight % or lower		-

Table 4-1 Recommended limit and use limit of fuel property

Properties	Recommended limits	Use limits	Test method
Foreign materials (foreign materials at engine fuel inlet)	5.0 mg/liter or less		JIS B 9931:2000 ISO 4405
Lubricity: MWSD (Measured mean Wear Scar Diameter) by HFRR wear test at 60 °C [140 °F] fuel temperature	460 μm [0.02 in.] or less (calculated wear scar diameter at WS 1.4 kPa {0.0143 kgf/cm^2} [0.2031 psi])		ISO 12156-1
BDF: Biodiesel fuel (FAME: Fatty Acid Methyl Ester)	BDF quality shall meet JIS K 2390, EN14214, or ASTM D6751 BDF blending of 5 % by volume or less is approved (Except in cases the value is specified by the emission control.)		JIS K 2390:2008 (FAME for mixture) ASTM D 6751 EN 14214

Note: When using fuel less than use limits, white smoke, worsening start up or unstable rotation may occur.

Recommended engine oil

CAUTION

Use only the engine oils recommended in this manual. Never use other oils.
The use of inappropriate or inferior oils will result in sticking of piston rings, seizure between piston and cylinder, or premature wear of bearings and moving parts, and significantly shortens the service life of the engine.

Many oil standards, which are established through special engine tests, are available to determine the quality of oil depending on the engines to which they will be applied and on operating conditions. Among those standards, API (American Petroleum Institute) service classifications are mostly used to classify engine oils. SAE specifies the viscosity only, while the API service classification indicates the quality level of engine oil.
For engine lubrication oil, please use API service classification CF.

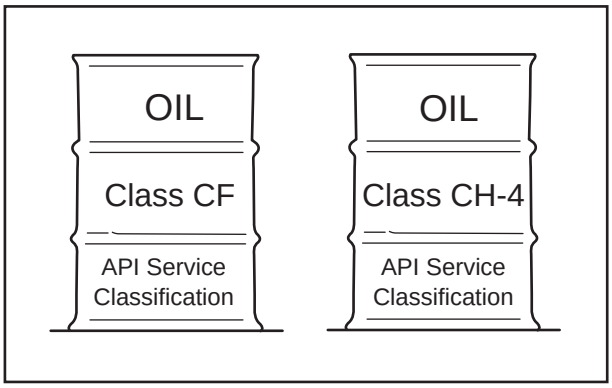

Fig. 5-1 Recommended engine oil

Selection of oil viscosity

Use the following chart to select the appropriate oil viscosity according to the ambient temperature.
Excessively high oil viscosity causes power loss and an abnormal rise of oil temperature, while excessively low oil viscosity accelerates wear due to inadequate lubrication, and also causes a decrease in engine output due to leakage of combustion gas.

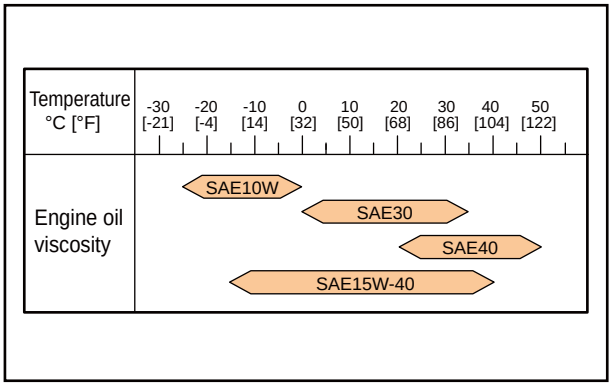

Fig. 5-2 Selection of oil viscosity

Handling engine oil

WARNING

Before filling the engine with engine oil, stop the engine and make sure there are no open flames and other fire hazards near the engine. Leaked or spilled oil on hot surfaces or electrical components can cause a fire. Wipe off any spilled oil immediately and thoroughly. After filling, securely close the filler cap.

CAUTION

Never mix different brands of engine oil. Mixing different brands of engine oil may cause a chemical reaction of additives in the engine oil that could degrade the engine oil quality.

When handling oil in greater than the legally specified quantities, be sure to have the work performed by a service station in compliance with the law. When removing oil from the engine or oil can, use an oil pump. Do not suck oil with the mouth to siphon it.
Be sure to close the cap on the oil can after use.
Keep oil in a well-ventilated area and out of direct sunlight.
Be sure to obtain the MSDS of the engine oil used and follow the instructions of the MSDS.

Engine oil performance requirements

Engine oil requires the following performances.

- Excellent dispersion performance (the ability of oil to disperse sludge in the oil) at high temperature that prevents engine oil deterioration due to sludge accumulation and soot contamination.
- Excellent acid-neutralizing performance that prevents oxidative degradation due to fuel sulfur content.
- Excellent high temperature oxidation stability that endures continuous operation under prolonged high-load.
- Sufficient viscosity concentration to maintain the cold start performance, and lubrication performance at high temperature.
- Good rust and corrosion resistance to water.
- Good foam resistance to prevent the lubricating quality from lowering due to oxidation.

Engine oil deterioration mechanisms

- Engine oil deteriorates due to natural deterioration and due to the contamination. The natural deterioration of oil has two primary causes; one is the degradation caused by oxidation reaction or thermo decomposition of base oil and additives, and the other is the degradation in the performance due to consumption of additives during use.
- Contaminants such as fuel and combustion products (soot, water vapor or oxidation products) that intrude into oil have critical influence on oil quality. Soot adheres to the oil film of cylinder wall, and is scraped off the cylinder wall by the piston ring. Such soot increases the rate of insoluble substances in the engine oil and can cause the wear of piston rings and cylinder walls.
- Abrasion powder in the engine oil also accelerates deterioration as it can catalyze oxidation reaction. Dust and dirt entered from outside deteriorate the engine oil as well. Contamination and deterioration process accelerates with operation time.
- Deterioration products and contaminants in the engine oil, if it is a small amount, are harmless as they can be dispersed in oil. However, if it is a large amount, they become harmful. Since such products and contaminants flow out of the oil pan and start to accumulate inside the piston and in the oil system, they eventually lead to serious problems such as piston ring sticking and bearing scuffing.
- Sulfur content in fuel is burned and transformed into sulfurous acid gas and sulfuric gas that cause corrosive wear of cylinders and piston rings. A detergent additive in the engine oil neutralizes them into harmless substances. As the detergent additive is consumed in its role of neutralizing, the engine oil total base value decreases. A decrease in the total base value indicates a corresponding decrease in soot dispersion ability. As a result, deposits on the pistons increase.
- Due to oxygen in the air, oil temperature rise under high-load continuous operation causes oxidation degradation. As oxidation degradation accelerates, oxidative products are polymerized. The polymerized oxidative products cause the oil viscosity to increase, which leads to the generation of sludge and varnish. As a result, problems such as lubrication failure and piston ring sticking occur. Also acid substances generated by oxidation can cause problems like main bearing corrosion.

Definition of properties of engine oil

Viscosity

Viscosity is a basic physical property of engine oil and is considered as the most important aspect when evaluating oil.

Contamination of oil by blow-by gas and deterioration of oil by its natural aging in crease the viscosity and degrade the performance of viscosity, which will cause the deposition of sludge inside the engine and oil filter clogging. Contamination of oil by fuel and sheared molecules of viscosity index improver in oil decrease the viscosity and degrade the performance of viscosity, which will cause insufficient lubrication and friction/wear of engine parts.

Total base number

Total base number (TBN) shows the ability to neutralize acids such as organic acid due to engine oil oxidation, or sulfurous or sulfuric acid due to the sulfur content of fuel.

Because TBN indicates the amount of dispersant detergent in oil, it can be used to estimate consumption of basic dispersant detergent. The ability to disperse sludge declines as dispersant detergent is used up.

Total acid number

The total acid number in oil increases as the organic acid is being derived by the engine oil oxidation, or sulfurous acid or sulfuric acid derived by the combustion of sulfur content of fuel, or the oil becomes contaminated with imperfect combustion products.

An increase in the total acid number will result in corrosion or wear of the inner parts of the engine (such as cylinder liners or metal) due to sulfur content, and piston ring seizure due to sludge.

Water content

Water in oil promotes corrosion/wear, and decreases lubricity in sliding parts.

Flash point

The flash point is lowered by contamination with fuels. Flash point is measured to check the dilution of fuel. The dilution of fuel reduces oil film, and causes insufficient lubrication that will cause friction or wear of engine parts.

Insoluble

Insoluble includes acid products of engine oil, imperfect combustion products, sludge or soot, metal abrasive particles and dust. Insoluble is an indication of degradation/contamination of oil.

Dispersant detergent, which is an additive in engine oil, absorbs sludge particles, and disperses them as fine particles in oil. Total insoluble density and remaining dispersibility can be obtained by measuring insoluble and coagulated insoluble (using chemical specialities to stop action of disperse detergent and to collect the sludge dispersed in oil) by which piston ring seizure or premature wear can be prevented before it occurs.

Service Limits of engine oil

Engine oil degrades through the use and by lapse of time.

To determine the timing of engine oil replacement, analyze the used oil, and understand the condition of oil deterioration and oil defacement. It is also required to compare the oil analysis results and the engine analysis results including inside contamination and wear condition of engine, and to consider the engine operating condition.

The engine oil affects the engine oil quality to use, the engine operating condition and the quality of fuel.Analyze the used oil, and understand the condition of oil deterioration and oil defacement. To determine the timing of engine oil replacement, the stabiration of engine is required.

Refer to the following table for the determination of engine oil performance degradation. If any of the following deviate the limit, replace the engine oil with new oil.

Table 5-1 Engine oil properties

Properties		Standard	Test method
Viscosity	mm^2/s [in^2/s] @100°C [212 °F]	+30% or less -15% or more of new oil	JIS K 2283:2007 ISO 3107 ISO 2909
Total base number	mgKOH/g	2.0 or more with hydrochloric acid (HCL) method 1/2 of new oil or more with perchloric acid (PCA) method	JIS K 2501:2003 ISO 3771
Total acid number	mgKOH/g	Up to +3.0 of new oil	JIS K 2501:2003 ISO 3771
Water content	Vol %	0.2 or less	JIS K 2275:1996 ISO 9029
Flash point (open cup)	°C [°F]	180 [356] or higher	JIS K 2265:2007 ISO 3769 ISO 2719
Pentane insoluble	Wt %	0.5 or less	ASTM D 893
Pentane insoluble coagulated	Wt %	3.0 or less	ASTM D 893

Note: In this operation manual, the word "coolant" represents the liquid combined water and LLC.

Recommended water for coolant

Use soft water for the engine cooling system. The water quality must meet the requirements in the Table below. Basically, the water quality should be within the recommended value, however, up to the limit is acceptable.

Table 6-1 Water quality standards

Item	Chemical symbol	Unit	Recommend value	Limit	Main adverse effect
pH (25 °C [77 °F])	-	-	6.5 to 8.0	6.5 to 8.5	Corrosion and rust, scale formation
Electrical conductivity (25 °C [77 °F])	-	mS/m	< 25	< 40	Corrosion and rust, scale formation
Total hardness	$CaCO_3$	ppm	< 95	< 100	Scale formation
M alkalinity	$CaCO_3$	ppm	< 70	< 150	Scale formation
Chlorine ion	Cl^-	ppm	< 100	< 100	Corrosion and rust
Sulfuric acid ion	SO_4^{2-}	ppm	< 50	< 100	Corrosion and rust
Total iron	Fe	ppm	< 1.0	< 1.0	Scale formation
Silica	SiO_2	ppm	< 30	< 50	Scale formation
Residue from evaporation	-	ppm	< 250	< 400	Scale formation

Note: Figures in parentheses are the standard value. In addition to the items specified above, turbidity is specified to be below 15 mg/liter.

Long life coolant (LLC)

⚠ CAUTION

Should coolant or LLC be accidentally consumed, induce vomiting immediately and seek medical attention. If LLC should enter eyes, flush immediately with plenty of water and seek medical attention.

Be sure to use Mitsubishi Heavy Industries, Ltd. genuine long life coolant (LLC) "GLASSY long life coolant (Ethylene glycol type)" or "PG GLASSY long life coolant (Non-amine type)" as coolant. When using other brand LLCs by necessity, be sure to use the LLC that meets the specification in Mitsubishi Heavy Industries, Ltd. Mitsubishi heavy industries, Ltd. disclaim the warranty claim concerning malfunctions caused by the use of LLC that does not meet the following specification.

Genuine LLC

Mitsubishi Heavy Industries, Ltd. recommends the use of our genuine long life coolant "GLASSY long life coolant (Ethylene glycol type)", and Eco-friendly product "PG GLASSY long life coolant (Non-amine type)", which are most appropriate coolant for diesel engine from Mitsubishi Heavy Industries, Ltd.

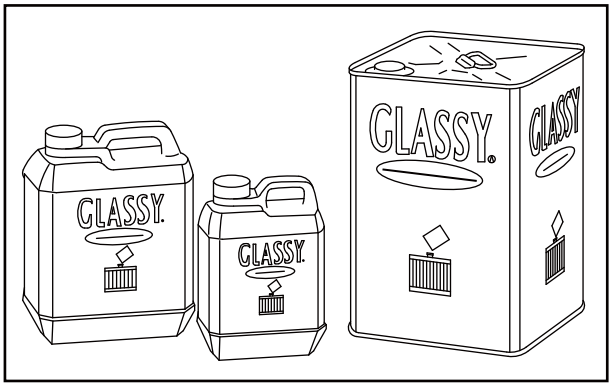

Fig. 6-1 GLASSY - LLC

Other brand LLCs

CAUTION

Never mix Mitsubishi Heavy Industries, Ltd. genuine LLC with other brand LLCs. Mixing with other brand LLCs degrades the performance of Mitsubishi Heavy Industries, Ltd. genuine LLC.

When using LLC other than Mitsubishi Heavy Industries, Ltd. genuine long life coolant (LLC) "GLASSY long life coolant (Ethylene glycol type)" or "PG GLASSY long life coolant (Non-amine type)", be sure to use the LLC which meets specification in Mitsubishi Heavy Industries, Ltd.

The quality and performance of commercially available LLCs as well as their component variations are the responsibility of LLC suppliers.

Before purchasing commercial LLC, be sure to discuss the suitability of LLC with the LLC supplier.

Use only all-season LLC (non-amine type). Do not use antifreeze alone instead of LLC.

Standard for other brand LLC

When using other brand LLCs by necessity, be sure to use the LLC that meets following specification. Mitsubishi heavy industries, Ltd. disclaim the warranty claim concerning malfunctions caused by the use of LLC that does not meet the following specification.

General demands of LLC

- LLC shall be a homogeneous liquid.
- Engine cooling system shall not receive troubles such as corrosions and precipitation products etc. by LLC when the LLC is diluted to 30 to 60 % density.
- LLC shall be mixed with other LLC that satisfies this specification, and shall not separate elements each other, and shall not decrease the performance each other.
- LLC shall not allow the container to be corroded, and shall not has precipitation products etc. even if LLC is left in the container for 6 months.
- LLC shall not has extraction products etc. even if LLC is kept in -20 to -25°C [-4 to -13°F]
- The validity term of the quality that provides with this specification is 2 years after it delivers with the indoor normal temperature keeping.

LLC specification

LLC shall examine according to JIS K2234 section 7 (examination methods), and satisfy this specification. General matters and the sample to the examination is shown in JIS K2234.

Table 6-2 LLC specification

Property				Standard
External				Not precipitation
Density				Minimum 1.112 g/cm^3 [69.4199 lb/ft^3] (20/20 °C) [68/68 °F] (Stock solution)
Water content				Maximum 5.0 weight % (Stock solution)
Frozen temperature		30 vol %		Maximum -14.5 °C [6 °F]
		50 vol %		Maximum -34.0 °C [-29 °F]
Boiling temperature				Minimum 155 °C [311 °F] (Stock solution)
pH				7.0 to 11.0 (30 vol %)
Bubbling character (ASTM D 3306-01)		30 vol %		Maximum 4.0 ml
		33$^{1/3}$ vol %		Maximum 150 ml, Disappearance of bubble within 5 sec.
Hard water adaptability				Maximum 1.0 (50 vol %)
Metallic causticity (88±2°C [190±36°F], 336±2 Hr, 30 vol % (E.G), 50 vol % (P.G))	Test piece	Mass change	Aluminum	±0.30 mg/cm^2
			Cast iron	±0.15 mg/cm^2
			Steel	±0.15 mg/cm^2
			Brass	±0.15 mg/cm^2
			Solder	±0.30 mg/cm^2
			Copper	±0.15 mg/cm^2
		External of test piece after the examination		Not corrosion on surface excluding between test piece and spacer. Discoloration is OK.
	Bubbling while examination			Not bubbling overflow
	Properties of liquid after the examination	pH		6.5 to 11.0
		pH change		±1.0
		Precipitation		Maximum 0.5 vol %
		External of liquid		Not remarkable discoloration, separation and gel.
Circulation metallic causticity (98±2°C [208±36°F], 1000 Hr, 30 vol % (E.G), 50 vol % (P.G))	Test piece	Mass change	Aluminum, Cast iron, Steel, Brass, Solder, Copper	±0.30 mg/cm^2
		External of test piece after the examination		Not corrosion on surface excluding between test piece and spacer. Discoloration is OK.
	Properties of liquid after the examination	pH		7.0 to 9.0
		pH change		±1.0
		Pre-alkalinity change		±15 %
		Precipitation		1.0 vol %
		External of liquid		Not remarkable discoloration, separation and gel.
		Density of ion	Fe, Cu, Al, Zn, Pb, NH_4^+	Maximum 10 ppm

Table 6-2 LLC specification

Property				Standard
Circulation metallic causticity (88±3°C [190±37°F], 1000±2 Hr, 30 vol % (E.G))	Test piece	Mass change	Aluminum	±0.60 mg/cm^2
			Cast iron	±0.30 mg/cm^2
			Steel	±0.30 mg/cm^2
			Brass	±0.30 mg/cm^2
			Solder	±0.60 mg/cm^2
			Copper	±0.30 mg/cm^2
		External of test piece after the examination		Not corrosion on surface excluding between test piece and spacer. Discoloration is OK.
	Properties of liquid after the examination	pH		6.5 to 11.0
		pH change		Maximum ±1.0
		External of liquid		Not remarkable discoloration, separation and gel.
	Condition of parts	Pump seal		Not trouble while the examination
		Inside of pump case and blade		Not remarkable corrosion
Rubber adaptability (30 vol %, 115°C [239°F], 360 Hr)	Silicon	Tensile strength change		-60 to 0 %
		Elongation change		-40 to +20 %
		Volume change		0 to +40 %
		Hardness change		-20 to +10 %
	Acrylonitrile butadiene rubber	Tensile strength change		0 to +10 %
		Elongation change		-15 to +15 %
		Volume change		0 to +40 %
		Hardness change		-10 to 0 %
	Ethylene propylene diene monomer	Tensile strength change		0 to +10 %
		Elongation change		-30 to 0 %
		Volume change		0 to +10 %
		Hardness change		-10 to 0 %
Storage stability vol % (30 vol %, room temperature, 6 Hr)				Maximum 0.3

Maintenance of LLC

⚠ CAUTION

Should coolant or LLC be accidentally consumed, induce vomiting immediately and seek medical attention. If LLC should enter eyes, flush immediately with plenty of water and seek medical attention.
LLC is toxic. Never dispose of coolant containing LLC drained from engine into regular sewage. For disposal of used coolant, consult LLC distributor.

Replacement intervals of LLC

CAUTION

Be sure to renew LLC at the intervals specified in the maintenance schedule of this manual.
Failure to renew LLC may cause malfunctions due to performance degradation of preventing rust and cavitation.

The coolant mixed with LLC which Mitsubishi Heavy Industries, Ltd. recommended expires in 2 years. Be sure to change coolant at least once every 2 years.

LLC concentration

Keep the LLC concentration of 30 % (GLASSY) and 40 % (PG GLASSY) on any temperature conditions. LLC of less than 30 % concentration does not provide sufficient corrosion protection. If the LLC concentration is lower than 10 %, it may accelerate corrosion.
When adding coolant, do not add plain water. Always use coolant with the same LLC concentration.

Table 6-3 Recommended LLC concentration

Item	Type	External	Lowest ambient temperature			
			-10 °C [14 °F] or above	-20 °C [-4 °F] or above	-30 °C [-22 °F] or above	-45 °C [-40 °F] or above
LLC concentration (%)	GLASSY	Green	30	40	50	60
	PG GLASSY	Red	40	55	70	-

Note: (a) If the outside air temperature is -30 °C or less, use "GLASSY".
(b) The concentration above is based on Mitsubishi Heavy Industries, Ltd. genuine LLC "GLASSY long life coolant (Ethylene glycol type)" or "PG GLASSY long life coolant (Non-amine type)".
For determining the accurate LLC concentration, refer to the instructions for the LLC used.

Importance of LLC

Today's trend is toward smaller and lighter engines offering greater output, lower fuel consumption and lower exhaust emission levels.
Conditions to which engine coolant is subjected, therefore, are becoming severer due to longer operating hours, higher coolant temperature and higher coolant circulating speed.
Many different materials such as steel, aluminum, copper, solder and rubber are used in the cooling system, and they are also subjected to the severe conditions described above. Those materials have different ionization characteristics, and this difference accelerates corrosion through the medium of engine coolant. To prevent such a problem, the use of LLC that contained the additive to prevent rust is very important.

Characteristics of LLC additive and important notes

LLC contains several chemicals in such proportions as to produce chemical reactions that suppress corrosion (ionization) of engine parts in contact with the coolant. LLC loses its effectiveness by hours of use as well as lapse of time.
Moreover, if the chemicals in LLC are not maintained, certain chemicals in the LLC become rapidly used up and result in dissolution of metals instead of protecting metals from corrosion. Consequently, other corrosion preventing chemicals react with dissolving metals and accelerate corrosion. This condition generates more severe corrosion than when plain soft water is used. This is a typical problem caused by the use of inappropriate LLC.

Examples of abnormalities caused by LLC (amine type)

Pitting of iron parts

Amines are generally effective in suppressing the rusting of ferrous metals, but they are said to cause problems for copper parts.
Dissolved copper (copper corrosion) in the cooling system deposits on iron parts and the copper deposits cause corrosion and then pitting on iron parts that have a high ionization characteristics due to galvanic or local-cell action.

Corrosion of aluminum parts

Silicate is highly effective in protecting aluminum against rusting. However, it is unstable in a solution in which the pH is 9 or lower, and can turn to gel and precipitate in the solution. For this reason, the pH is usually specified to be about 10 to ensure a high alkaline level.
This means, after silicate is used up, the high alkalinity causes chemical attacks on aluminum. To prevent this problem, proper maintenance of the coolant is required. For case example, rapid wear of mechanical seals in the water pump due to secondary effects of silicate gel formed. Corrosion of aluminum parts after silicate is consumed.

Pitting and clogging of the radiator

When LLC deteriorates or when its concentration in the coolant is too low, the anti-corrosion performance of LLC lowers and results in the corrosion of metals.Brass and solder tend to corrode faster than other metals, and corrosion of these metals is said to cause water leakage and clogs. Example: Holes and clogs in radiator

Chapter 7 MAINTENANCE SCHEDULE

How to use the maintenance schedule

Periodic inspection not only extends the service life of the engine but also serves to ensure safe operation. Be sure to conduct inspections and maintenance according to the maintenance schedule.

The maintenance schedule shows the standard service intervals. If you notice any abnormalities such as abnormal noise, black exhaust smoke, white exhaust smoke, extremely high temperature of exhaust gas, abnormal vibration, and fuel, oil or exhaust gas leakage, make sure to conduct the inspection and maintenance work, regardless of recommended service intervals in the "Maintenance schedule."

Note: Appropriate service intervals vary depending on the usage and operating conditions as well as consumption of fuel, oil and coolant. Check the operating record of the engine to determine the most appropriate service intervals. (Feel free to consult a dealer of Mitsubishi Heavy Industries, Ltd. regarding service intervals.)

Service the items at multiples of the original requirement. For example, at 1000 service hours, also service those items listed under every 250 service hours and every 50 service hours.

Items marked with * in the maintenance schedule require special tools or large equipment. For the servicing of those items, contact a dealer of Mitsubishi Heavy Industries, Ltd.

Maintenance schedule

Table 7-1 Maintenance schedule

Interval and Service item		Page
Every 50 service hours	Fuel tank - Drain water (If water sedimenter is installed, drain water every 500 service hours or 1 year.)	8-2
	Air cleaner - Check	8-14
First 50 service hours for a new or overhauled engine	Solenoid fuel pump filter - Inspect and clean	8-2
	Engine oil and Oil filter - Replace	8-7
	Bolts and nuts on the engine - Retighten	*
Every 100 service hours	Solenoid fuel pump filter - Inspect and clean	8-2
Every 250 service hours	Engine oil and Oil filter - Replace	8-7
	Belt and belt tension - Inspect and Adjust	8-1
	Radiator fins - Check and Clean	8-13
Every 400 service hours	Fuel filter (cartridge type) - Replace	8-5
Every 500 service hours	Fuel filter element (switching cock type) - Replace	8-6
	Solenoid fuel pump filter - Replace	8-6
	Valve clearance - Inspect	*
	Cleaning the fuel tank (Every 500 service hours or Every 1 years)	*
	Checking glow plug	*
Every 1000 service hours	Starter - Inspect	8-18
	Alternator - Inspect	8-18
	Bolts and nuts on the engine - Retighten	*
Every 1500 service hours	Nozzle tip - Clean	*
Every 3000 service hours	Fuel injection nozzle - Check and maintenance	*
	Turbocharger - Inspect	8-14
Every 2 years	Coolant - Change	8-10
As required	Pre-cleaner - Clean, Inspect and Replace	8-15
	Air cleaner element - Clean, Check and Replace	8-16
	Fuel system - Bleed air	8-3
	Water sedimenter - Drain water	8-5
	Specific gravity of battery electrolyte - Check	8-17

Basic engine

Belt and belt tension - Inspect and Adjust

CAUTION

If defects such as cuts or surface separations are found during inspection, replace the belt.
Keep oil and grease away from the belt. They may cause the belt to slip and shorten the service life.
Excessive belt tension can cause rapid wear of the alternator bearing and shorten the service life of the belt.
Adjust the belt tension accurately by following the procedures below.

Belt - Inspect

1. Inspect the belt visually for separation or damage. If any abnormality is found, replace the belt with a new one.
2. Inspect belt tension (deflection).
   Push the belt downward at the midway between pulleys. If the deflection is 12 mm [0.47 in.], the tension is correct.
   Belt pushing force: Approx. 98 N {10 kgf} [22 lbf]
   If the deflection of belt is not within the standard, adjust the belt tension.

Belt tension (Alternator side) - Adjust

1. Remove the belt cover.
2. Loosen all retaining bolts of the alternator and adjusting plate.
3. Move the alternator to adjust the belt tension.
4. After adjusting the belt tension, tighten all retaining bolts of the alternator and adjusting plate.
5. Install the belt cover.

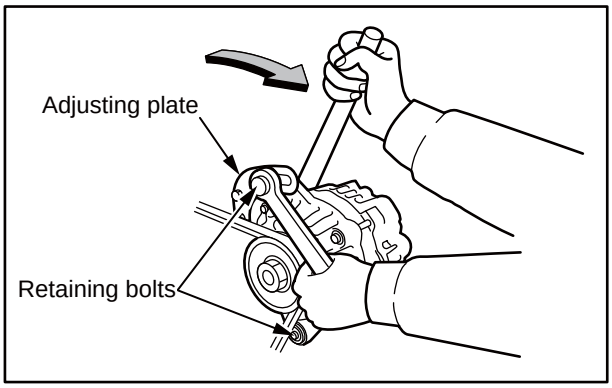

Fig. 8-1 Belt and belt tension - Inspect and Adjust

Fuel system

Fuel tank - Drain water

WARNING

When working around fuel, make sure there are no open flames, heaters or other fire hazards. Wipe off any spilled fuel completely. Spilled fuel can ignite and cause a fire.

CAUTION

Do not remove the strainer when filling the fuel. For fuel to be used, refer to "FUEL" (4-1).
Bleeding water procedure described below is a commonly used procedure. Some application may be equipped with different fuel tank.

If fuel gets mixed with particles of foreign materials such as dust, dirt, or water, it can cause not only decrease of output but also malfunctions of the fuel system. To avoid such a problem, drain fuel tank as described below.

1. Place a fuel tray (capacity of 2 L [0.5 U.S. gal.] or more) under the drain cock of fuel tank.
2. Open the drain cock of fuel tank and drain fuel at least 1 to 2 L [0.3 to 0.5 U.S. gal.].
3. Make sure that water and particles of foreign materials discharged with fuel. Close the drain cock.

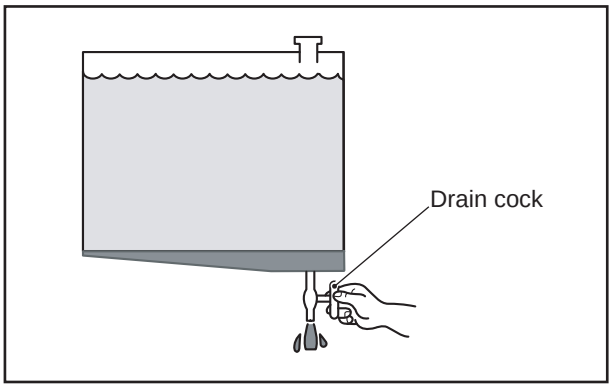

Fig. 8-2 Fuel tank - Drain water

Solenoid fuel pump filter - Inspect and clean

WARNING

When handling fuel, make sure there are no open flames or other fire hazards near the engine. Wipe off any spilled fuel completely. Spilled fuel can ignite and cause a fire.

1. Clean around the solenoid fuel pump.
2. Check the starter key is at the "OFF" position.
3. Place a fuel tray under the solenoid fuel pump.
4. Close the valve to stop fuel flow.
5. Remove the lower solenoid fuel pump cover.
6. Soak the gaskets, filter, magnet and cover in fuel to clean.
7. Inspect if there is any damaged part, and if so, change it for a new one.
8. Put all the parts back together in a reverse way.
9. Open the main valve of the fuel tank.
10. Turn the starter switch to the "ON" position.
11. Make sure that solenoid fuel pump clicks and fuel starts to flow.
12. Check the solenoid fuel pump for fuel leakage. If leakage is found, reassemble again.
13. Bleed air from the fuel system.
    Refer to "Fuel system - Bleed air" (8-3).

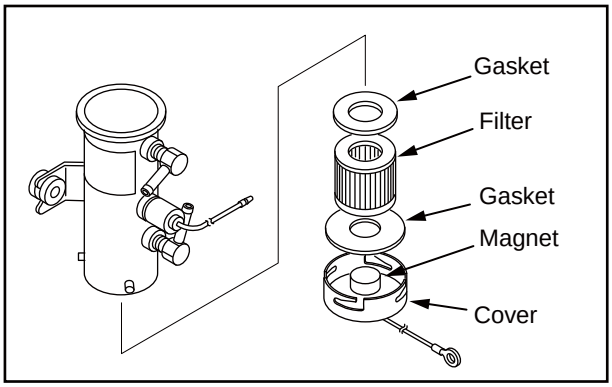

Fig. 8-3 Solenoid fuel pump filter - Inspect and clean

Fuel system - Bleed air

WARNING

When handling fuel, make sure there are no open flames or other fire hazards near the engine.
Wipe off any spilled fuel completely.Spilled fuel can ignite and cause a fire.

When cleaning or replaceing the parts of fuel system, perform air bleeding from each parts.
Note: Air in the fuel injection pipe and nozzle is discharged automatically by clanking of engine.

Fuel filter element (switching cock type) - Bleed air

1. Turn the fuel filter cock to "AIR" position.
2. Feed fuel using the solenoid fuel pump.
3. Return the cock to "ON" position when the fuel flow from overflow pipe becomes free of bubbles.
4. Stop feeding fuel.

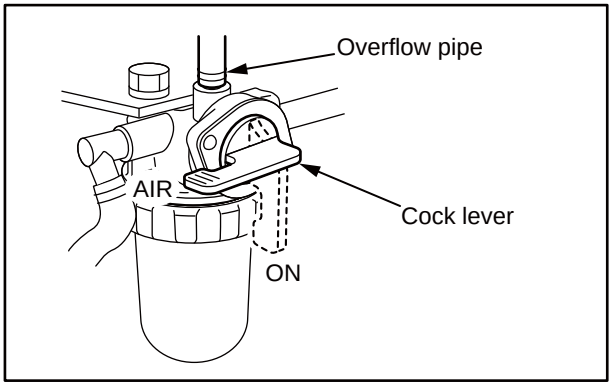

Fig. 8-4 Fuel filter element (switching cock type) - Bleed air

Fuel filters (cartridge type) - Bleed air

1. Loosen air vent plug 1 of fuel filter.
2. Feed fuel using the solenoid fuel pump.
3. When the fuel from the air vent plug 1 becomes free of bubbles, stop priming and tighten the air vent plug 1 to the specified torque.
4. Loosen air vent plug 2 of fuel filter.
5. When the fuel from the air vent plug 2 becomes free of bubbles, stop priming and tighten an air vent plug 2 to the specified torque.
6. Stop feeding fuel.

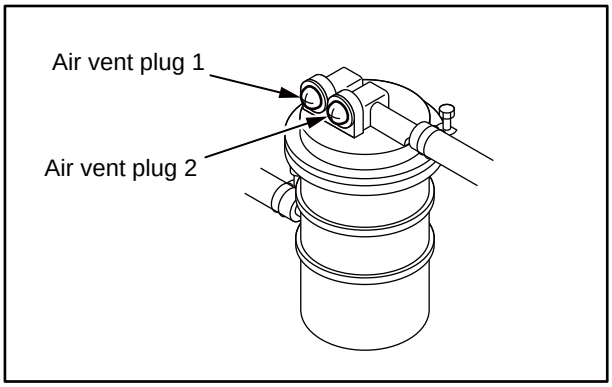

Fig. 8-5 Fuel filters (cartridge type) - Bleed air

Water sedimenter - Bleed air

1. Loosen the fuel inlet port air vent plug of water sedimenter.
2. Feed fuel using the solenoid fuel pump.
3. When the fuel from the fuel inlet air vent plug becomes free of bubbles, stop priming and tighten the plug to the specified torque.
4. Loosen the fuel outlet air vent plug.
5. When the fuel from the fuel outlet air vent plug becomes free of air bubbles, stop priming and tighten the plug to the specified torque.
6. Stop feeding fuel.

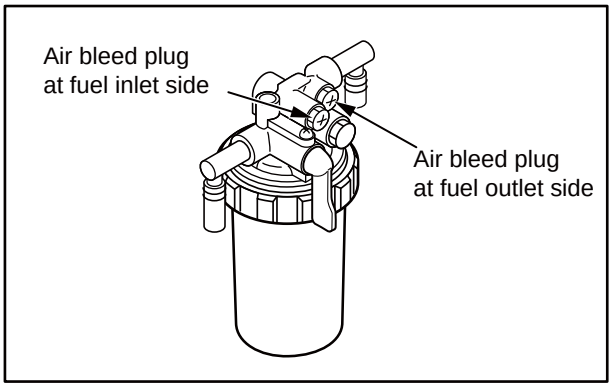

Fig. 8-6 Water sedimenter - Bleed air

Water sedimenter - Drain water

WARNING

When handling fuel, make sure there are no open flames or other fire hazards near the engine.
Wipe off any spilled fuel completely. Spilled fuel can ignite and cause a fire.

1. Clean around the water sedimenter.
2. Place a fuel tray under the water sedimenter.
3. Turn the cock to "C" (close) position, stop the flow of fuel.
4. Remove ring nut and cup.
5. Drain water in the cup and soak the element in fuel to clean.
6. Install filter element and cup with careful attention to O-ring and then fix with ring nut.
7. Bleed air of water sedimenter.
   (Refer to "Water sedimenter - Bleed air" (8-4))
8. Turn the cock to "O" (open) position, start the engine and let it idle for several minutes.
9. Check the water sedimenter for fuel leakage. If leakage is found, loosen ring nut and check O-ring for damage.

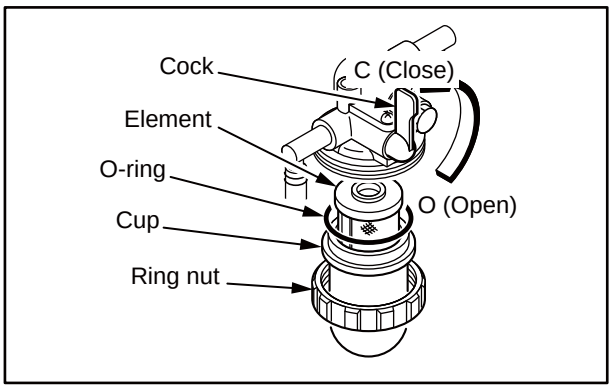

Fig. 8-7 Water sedimenter - Drain water

Fuel filter (cartridge type) - Replace

WARNING

When handling fuel, make sure there are no open flames or other fire hazards near the engine.
Wipe off any spilled fuel completely. Spilled fuel can ignite and cause a fire.

1. Clean the area around the fuel filters.
2. Place a fuel tray under the fuel filter.
3. Put a stopper on fuel pipe and stop fuel flow.
4. Change the fule filter for a new one.
5. Bleed air from the fuel filter.
   Refer to "Fuel system - Bleed air" (8-3).
6. Start the engine and let it idle for several minutes.
7. Check the fuel filter for fuel leakage. If fuel leakage is found, retighten the fixing clamp of the fuel pipe.

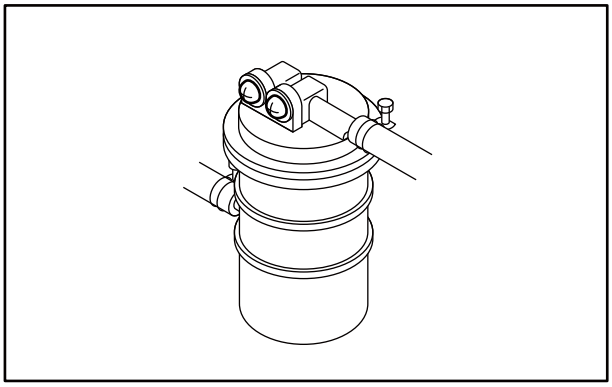

Fig. 8-8 Fuel filter (cartridge type) - Replace

Fuel filter element (switching cock type) - Replace

WARNING

When handling fuel, make sure there are no open flames or other fire hazards near the engine.Wipe off any spilled fuel completely. Spilled fuel can ignite and cause a fire.

1. Clean the area around the fuel filters.
2. Place a fuel tray under the fuel filter.
3. Turn the cock to "C" (close) position, stop fuel flow.
4. Remove ring nut and cup, chang the filter elemet for a new one and then fix the ring nut.
5. Bleed air from the fuel filter.
   Refer to "Fuel system - Bleed air" (8-3).
6. Turn the cock to "ON" position, start the engine and let it idle for several minutes.
7. Check the fuel filter for fuel leakage. If leakage is found, loosen ring nut and check O-ring for damage.

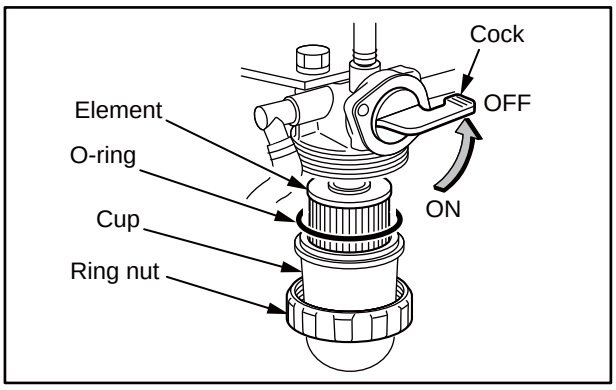

Fig. 8-9 Fuel filter element (switching cock type) - Replace

Solenoid fuel pump filter - Replace

WARNING

When handling fuel, make sure there are no open flames or other fire hazards near the engine.
Wipe off any spilled fuel completely. Spilled fuel can ignite and cause a fire.

1. Clean around the solenoid fuel pump.
2. Check the starter key is at the "OFF" position.
3. Place a fuel tray under the solenoid fuel pump.
4. Close the valve to stop fuel flow.
5. Remove the lower solenoid fuel pump cover.
6. Change the element for a new one.
7. Inspect if there is any damaged part, and if so, change it for a new one.
8. Put all the parts back together in a reverse way.
9. Open the main valve of the fuel tank.
10. Turn the starter switch to the "ON" position.
11. Make sure that solenoid fuel pump clicks and fuel starts to flow.
12. Check the solenoid fuel pump for fuel leakage. If leakage is found, reassemble again.
13. Bleed air from the fuel system.
    Refer to "Fuel system - Bleed air" (8-3).

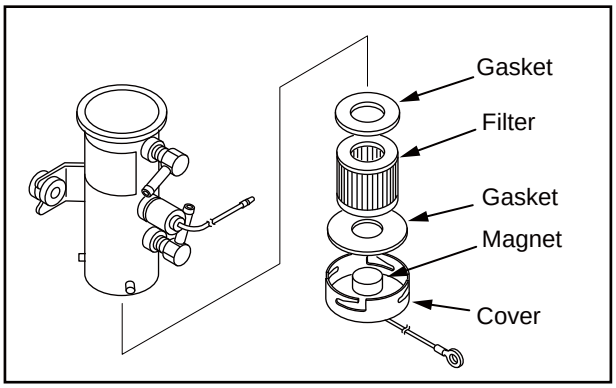

Fig. 8-10 Solenoid fuel pump filter - Replace

Lubricating system

Engine oil and Oil filter - Replace

⚠ CAUTION

When draining oil or changing the oil filter, wear gloves. Hot engine oil and parts may cause burns.

CAUTION

Do not dump waste oil. It is forbidden by law. For disposal of waste oil, consult a dealer of Mitsubishi Heavy Industries, Ltd.

Change engine oil and the oil filter at the same time.

Also checking and analyzing the oil properties is recommended when changing the engine oil.

Do not reuse the oil filter element, as it is a paper type.When replacing filters, always replace gasket with new ones.

Engine oil - Drain

After the engine has stopped, drain engine oil from the engine oil drain port.

Note: Draining by suction should be avoided.

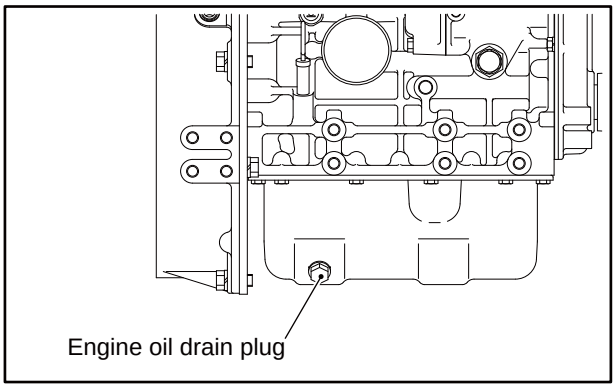

Fig. 8-11 Engine oil drain plug

Engine oil - Refill

1. Make sure that the oil drain plug is tightened.

2. Remove the oil filler cap.

3. Fill the engine oil pan with specified engine oil to the specified level.

Note: For engine oil, refer to "ENGINE OIL" (5-1). For engine oil capacity, refer to "MAIN SPECIFICATIONS" (12-1).

4. Check the oil level in the oil pan as follows:

5. Pull out the oil level gauge, and wipe it with a waste cloth.

6. Insert the oil level gauge fully into the oil level gauge guide, then pull out the gauge again.

7. The proper oil level is between the high and low marks on the oil level gauge. If the oil level is low, add engine oil of the specified type.

8. Check the oil pan and other area for oil leakage. Repair any oil leakage found.

9. Run the engine with starter for approx. 10 seconds while pulling the stop lever and feed engine oil to all parts of engine. Stop the operation for 1 minute, then, repeat the operation two or three times. Circulate engine oil to all parts of the engine.

Note: Prepare for the Cooling system.

10. Check the oil level with the oil level gauge again, and add oil to the specified level.

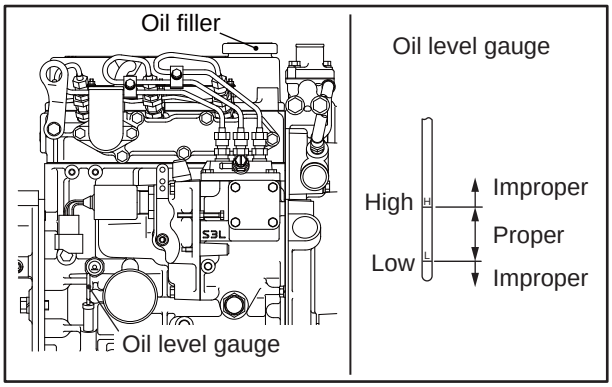

Fig. 8-12 Engine oil - Refill

Oil filter - Change

WARNING

Do not use a dented filter cartridge.
Filter damage or fule leakage may occur while engine is running and it can cause fire hazard.

CAUTION

To avoid damage to the filter, do not use a filter wrench when installing. Tighten the filter by hand.

1. Clean around the oil filters.
2. Place a drip pan under the oil filter.
3. Using a filter wrench, remove the oil filter.

Note: Check the element of the oil filter that has been removed. If metal particles are found, consult a dealer of Mitsubishi Heavy Industries, Ltd.

4. Thoroughly wipe off oil on the mounting surface of oil filter with a waste cloth.
5. Check the new oil filter for proper seating of gasket.
6. Apply clean engine oil to gasket.
7. Install the oil filter. When the filter gasket contacts the mounting surface of filter, tighten the filter with specified torque.

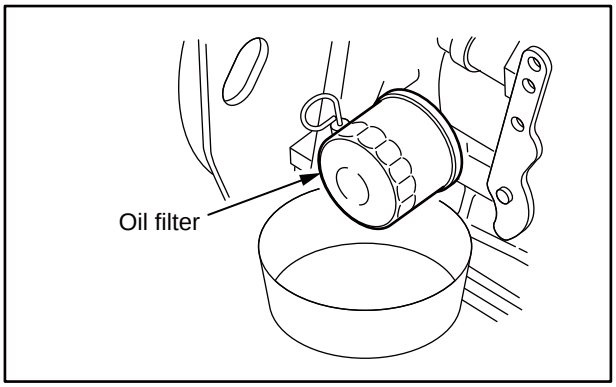

Fig. 8-13 Oil filter - Change

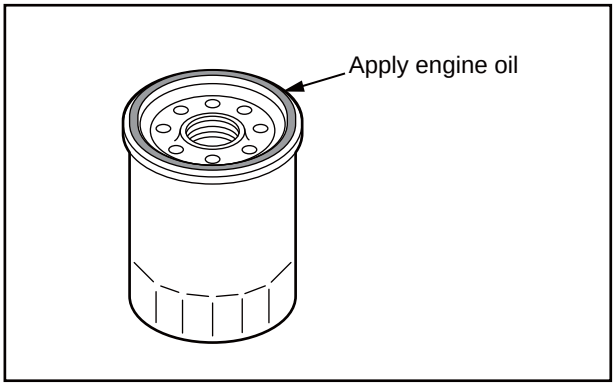

Fig. 8-14 Oil filter

Cooling system

Coolant - Change

WARNING

Remove the radiator filler cap only after the engine has cooled to room temperature. Place a waste cloth over the cap, and loosen the cap about a half-turn or stand the lever to the upright position to release internal pressure. Never open the radiator filler cap while the engine is hot, otherwise the steam or hot coolant spurts out and you may be scald with it.
Coolant (containing LLC) drained from the engine is toxic. Never dispose of coolant into regular sewage. For disposal of used coolant, consult a dealer of Mitsubishi Heavy Industries, Ltd. or a industrial waste disposer.

CAUTION

The service life of LLC is 2 years. Be sure to change coolant at least once every 2 years.

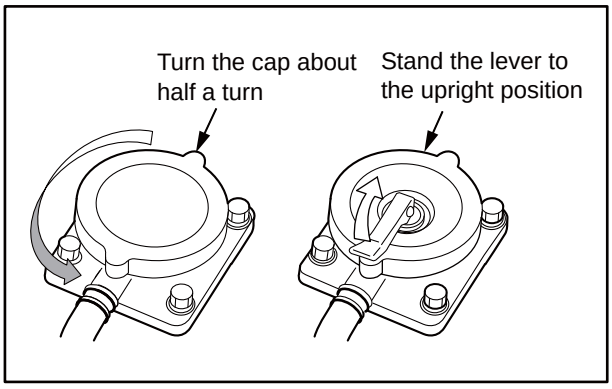

Fig. 8-15 Radiator filler cap

Coolant - Drain

1. When draining coolant immediately after engine operation, idle the engine in low gear for 5 to 6 minutes until the coolant temperature drops to 70 to 80 °C [158 to 176 °F].
2. Open the radiator filler cap.
3. Place coolant receiving can under the drain cocks and plugs, and open the coolant drain cocks and plugs to drain the coolant.

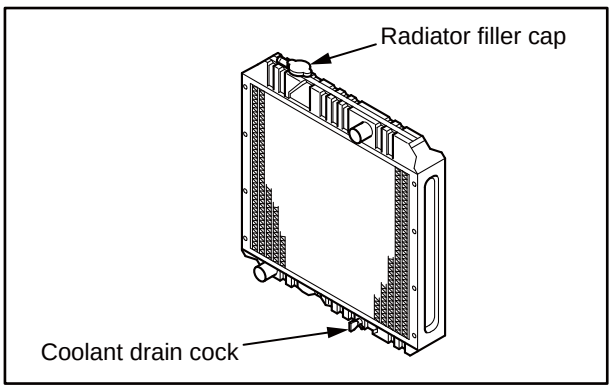

Fig. 8-16 Coolant drain cock (radiator)

Cooling system - Clean

CAUTION

Clean the cooling system when operating the engine first time, or restarting the engine after storage with coolant drained.

1. Close coolant drain cocks and plugs.
2. Pour in a cleaning solution (a solution that is non-corrosive to rubber and metals) in the cooling system, and operate the engine at 800 to 900 min^{-1} for about 15 minutes, then drain the cleaning solution.
3. Close coolant drain cocks and plugs.
4. Pour in fresh water, and operate the engine at 800 to 900 min^{-1} for about 10 minutes.
   Repeat rinsing until the draining water becomes clear and clean.

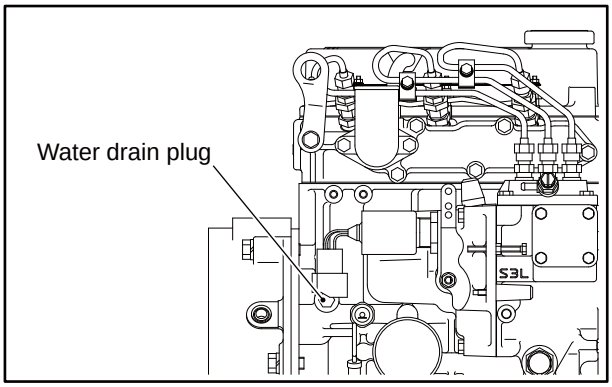

Fig. 8-17 Coolant drain plug (engine)

Coolant - Refill

1. Tighten the coolant drain cocks and plugs.
2. Remove the radiator filler cap, and pour in undiluted LLC.

Note: Determine the amounts of LLC and water to be added by using the LLC concentration chart.
For the coolant, refer to "COOLANT" (6-1). For the coolant capacity, refer to "MAIN SPECIFICATIONS" (12-1).

3. Pour in water (soft water with minimal impurities, such as tap water) slowly to "FULL" level line.
4. Check the radiator and other parts for coolant leakage. If any coolant leakage is found, repair it.
5. When coolant reaches "FULL" level line, close the radiator filler cap securely.
6. Run the engine with starter for approx. 10 seconds while pulling the stop lever.
   Stop the operation for 1 minute, then, repeat the operation two or three times to bleed the cooling system.
7. Check the coolant level in the radiator.
   If the engine is equipped with a reserve tank, fill the reserve tank with coolant to "FULL" level line as well.

CAUTION

Always use the coolant with the same LLC concentration.

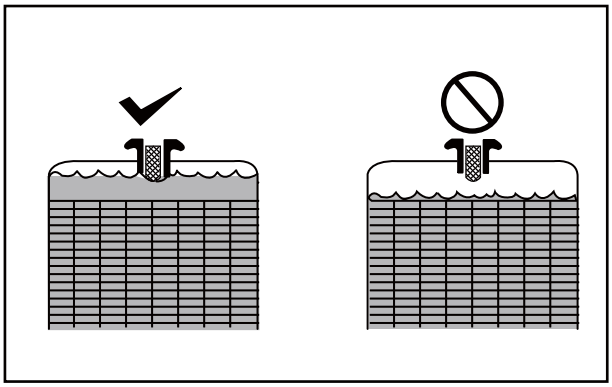

Fig. 8-18 Radiator coolant level

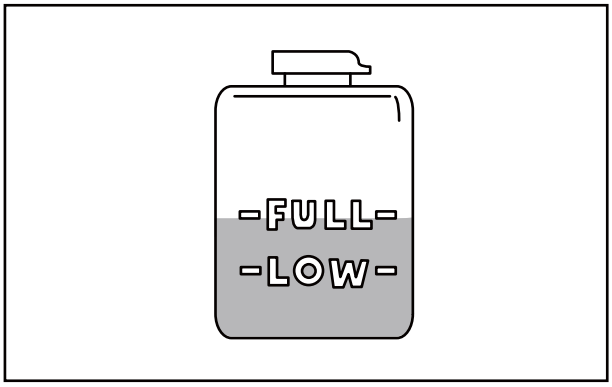

Fig. 8-19 Reserve tank

Radiator fins - Check and Clean

⚠ CAUTION

When handling compressed air, wear safety goggles, a hardhat, gloves and other necessary protective gear. Works without wearing proper protective gear could result in serious injuries.

Check the radiator fins for holes and cracks.
To clean the radiator fins, blow compressed air from the opposite direction of the normal air flow.

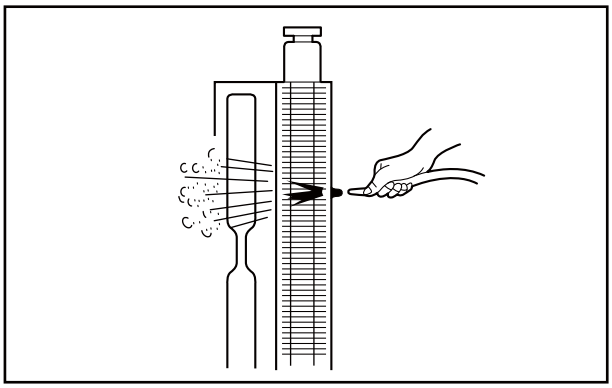

Fig. 8-20 Radiator fins - Clean

Inlet and exhaust systems

Air cleaner - Check

CAUTION

Checking procedure described below is a commonly used procedure. Some application may be equipped with different air cleaner.

1. Check the air cleaner indicator for the element clog.
2. If the element is clogged, the red signal mark is visible.
3. Immediately clean or replace the air cleaner element when the signal turns red.

Note: For cleaning of the air cleaner element, refer to "Air cleaner element - Clean, Check and Replace" (8-16).

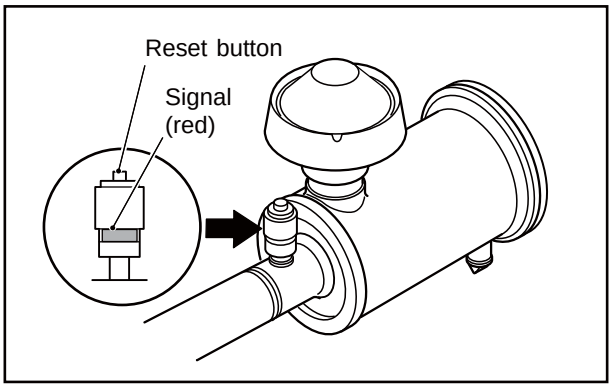

Fig. 8-21 Air cleaner - Check

Turbocharger - Inspect

CAUTION

Check the turbocharger when the engine is cold. Also, make sure that the compressor wheel is not rotating before inspecting the turbocharger.

CAUTION

If the color of the exhaust gas is abnormal, also inspect the turbocharger.

Disconnect the pipe from the air inlet side. Hold the compressor wheel nut by hand and turn the wheel to check for looseness or abnormal noise. Replace the turbocharger if looseness or abnormal noise is found.

Note: When removing and inspecting turbocharger, contact a dealer of Mitsubishi Heavy Industries, Ltd.

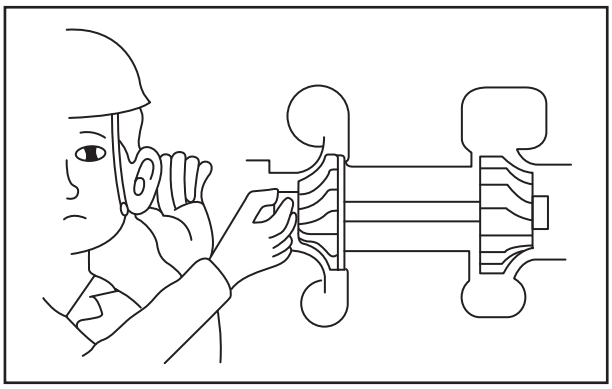

Fig. 8-22 Turbocharger - Inspect

Pre-cleaner - Clean, Inspect and Replace

⚠ CAUTION

Never service the pre-cleaner while the engine is running. Servicing the air cleaner while the engine is running can cause particles of foreign matter to enter the engine and result in rapid wear of parts, leading to a shorter service life of the engine.

The pre-cleaner is equipped to the silencer of the turbocharger to prevent foreign items from sucking and keep the engine clean for optimum performance. Be sure to clean the pre-cleaner as described below.

1. Remove the pre-cleaner from the silencer, and hand-wash the pre-cleaner with a mild detergent.
2. Rinse the pre-cleaner with fresh water.
3. After drying thoroughly, inspect the pre-cleaner for defect. If any defect are found, replace the pre-cleaner with a new one.
4. After cleaning, inspecting or changing the pre-cleaner, reinstall it to the silencer.

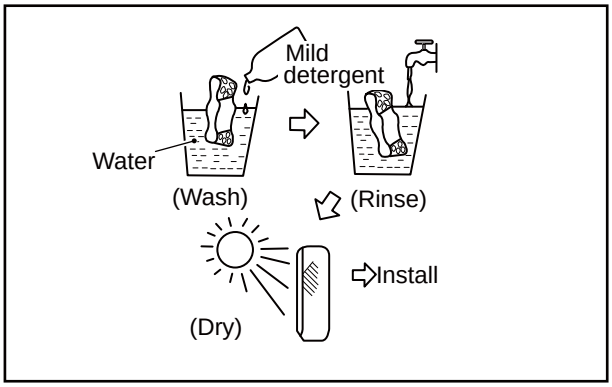

Fig. 8-23 Pre-cleaner - Clean

Air cleaner element - Clean, Check and Replace

⚠ CAUTION

When handling compressed air, wear safety goggles, a dust mask, a hardhat, gloves and other necessary protective gear. Works without wearing proper protective gear could result in serious injuries.
Never service the air cleaner while the engine is running. Servicing the air cleaner while the engine is running can cause particles of foreign material to enter the engine and result in rapid wear of parts, leading to a shorter service life of the engine.Never knock or hit the element.

CAUTION

Cleaning, inspecting and replacing procedure described below is a commonly used procedure. Some application may be equipped with different air cleaner.

1. Remove the air cleaner cap and wing bolt.
2. Remove the air cleaner element from the body.
3. Blow compressed air (0.69 MPa {7 kgf/cm^2} [100 psi] or lower) onto the inside surface of the element to remove foreign materials.
4. To remove dust stuck on the air cleaner element, blow dry compressed air onto the outside surface from a distance.
   Blow compressed air on the inside surface toward the outside along the pleats. Then, blow compressed air on the outside and inside surface again.
5. After cleaning, hold the air cleaner element near a light bulb to illuminate the inside, to check for defects such as cuts, pinholes or local wear.
6. If any defect is found, replace the air cleaner element with a new one.
7. Reassemble the air cleaner element as it is.

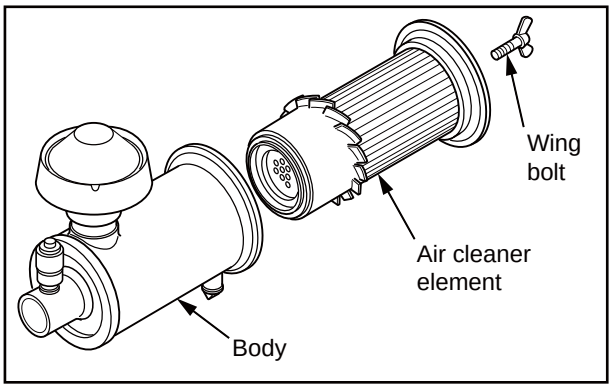

Fig. 8-24 Air cleaner element - Remove

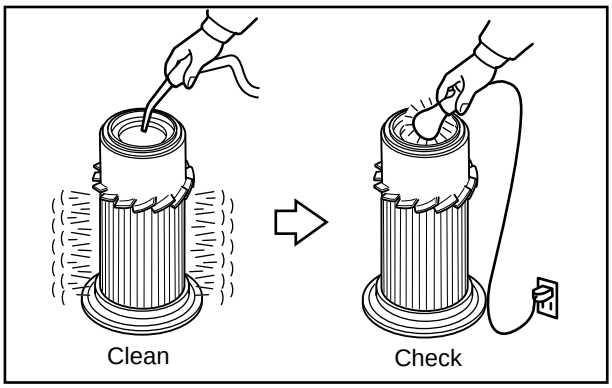

Fig. 8-25 Air cleaner element - Clean and Check

CAUTION

If defects such as cuts, pinholes or local wear are found in the element, or if the air cleaner indicator shows a red sign soon after the cleaned element is installed, change it for new one.

After cleaning or replacing the air cleaner element, press the reset button to reset the indicator.

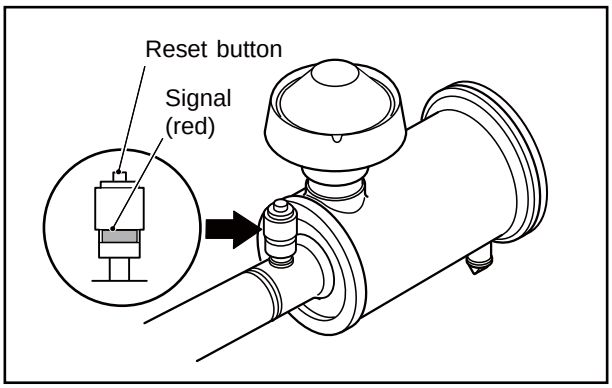

Fig. 8-26 Air cleaner - Check

Electrical system

Battery - Inspect

⚠ CAUTION

If battery electrolyte is spilled on your skin, flush immediately with plenty of water. If battery electrolyte enters the eyes, flush them immediately with lots of fresh water and seek medical attention at once.

Do not use open flames or other fire hazards near the battery. When handling the battery, be careful of sparks generated by accidental shorting.

Battery electrolyte level - Inspect

Battery electrolyte evaporates during use and the f electrolyte level gradually decreases. The proper electrolyte surface level is between the "LOWER LEVEL" and "UPPER LEVEL" lines.

For the battery without level lines, the proper electrolyte surface level is about 10 to 15 mm [0.394 to 0.591 in.] above the top of the plates.

If the electrolyte level is low, remove the caps and add distilled water to the proper level.

Note: When adding distilled water, pour in carefully.

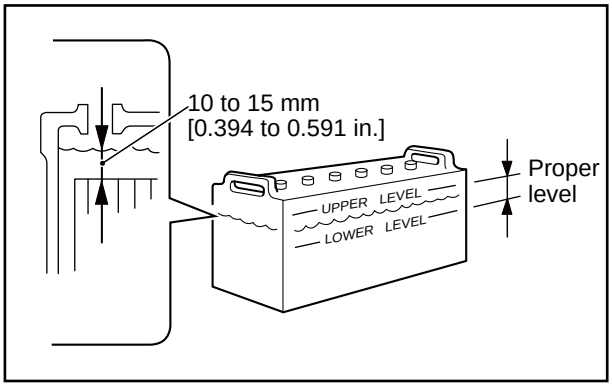

Fig. 8-27 Battery electrolyte level - Inspect

Specific gravity of battery electrolyte - Check

If the specific gravity measured at 20 °C [68 °F] is lower than 1.22, then charge the electrolyte.

Table 8-1 Specific gravity of electrolyte

Specific gravity at 20 °C [68 °F]	Condition	Remedy
From 1.26 to 1.28	Fully charged	-
From 1.22 to 1.26	Charged	Charge
Less than 1.22	Discharged	Charge

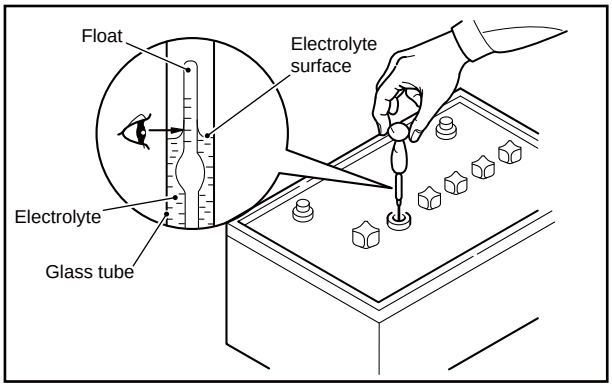

Fig. 8-28 Specific gravity of battery electrolyte - Check

Starter - Inspect

Visually check the starter for damage.

If the starter is dusty, blow dirt using compressed air.

Note: If the starter is defective, consult a dealer of Mitsubishi Heavy Industries, Ltd.

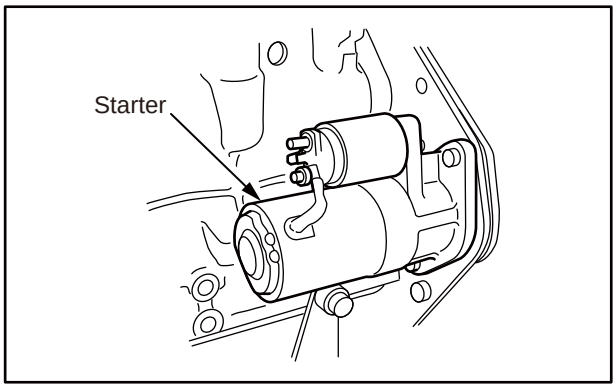

Fig. 8-29 Starter - Inspect

Alternator - Inspect

Visually check the alternator for damage.

If the alternator is dusty, blow foreign material using compressed air.

Remove the belt and check that the movement is smooth when rotating the pulley by hand.

Note: If the alternator is defectiv e, consult a dealer of Mitsubishi Heavy Industries, Ltd.

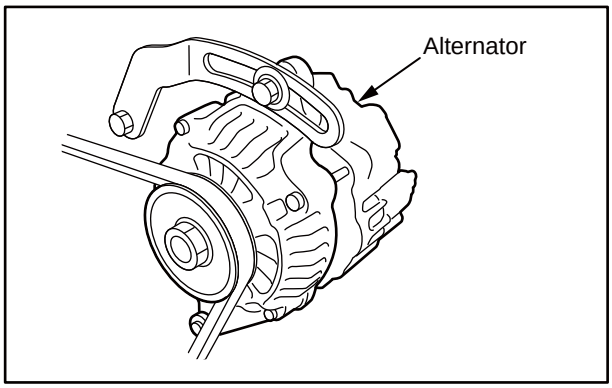

Fig. 8-30 Alternator - Inspect

Chapter 9 LONG-TERM STORAGE

Long-term storage

The following describes how to store the engine in a non-operable condition for 3 months or more and in an operable condition for 3 months or more.

If the engine has been left unattended for 3 months or more, the internal engine parts can rust, and that may cause damage to the engine.

When storing the engine for an extended period of time, be sure to follow the directions below.

Storing the engine in a non-operable condition for 3 months or more

Preparation for storage

1. Drain the engine oil in-use, pour new oil.
2. Prepare a fuel mixture containing 50 % rust-preventive oil (NP-9), and fill the fuel tank with it.
3. Operate under non-load minimum engine speed for 5 to 10 minutes.
4. Immediately before stopping the engine, spray volatile corrosion inhibitor (VCI) through the inlet port to prevent rust on the air intake system.
5. With the engine stopped, drain the fuel mixture from the fuel tank.
6. Apply rust-preventive oil (NP-3) liberally on the exposed sections of the machining.
7. Seal the air inlet, exhaust outlet, breather and other openings with an adhesive cloth tape.
8. Cover the entire engine.

Note: (a) Store the engine in a well-ventilated indoor area.

(b) It is not necessary to drain coolant since it contains LLC. (Add LLC to increase the concentration to between 30 to 60 %.)

(c) Post a sign at an easily noticeable place to warn that the rust-preventive oil in the engine must be replaced with engine oil, and the fuel tank must be filled with fuel before operating the engine for the first time after storage.

(d) New engine oil can substitute for rust-preventive oil (NP-10-2) of lubrication system.

Recommended rust-preventive oil and corrosion inhibitor

Table 9-1 Recommended rust-preventive oil and corrosion inhibitor

JIS No.		Recommended product	Application
K 2246	NP-3	Nippon Oil Corporation Anti Rust P-1600	Prevention of rust on exposed machine surfaces
	NP-9	Nippon Oil Corporation Anti Rust P-2400	Prevention of rust in fuel system
	NP-10-2	Nippon Oil Corporation Anti Rust P-230	Prevention of rust in lubricating system
Z 1519	-	Ryoukou Kagaku VCI Diana ND volatile corrosion inhibitor	Prevention of rust in air intake system

Maintenance during storage

Charge the battery once a month. First, check the battery electrolyte for proper level and then charge the battery.

Using the engine after storage

1. Remove the cover from the engine.
2. Connect a fully charged battery.
3. Remove the covers from the starters and alternator.
4. Adjust the tension of belt.

Note: Inspect and adjust V-belt tension. Refer to "Belt and belt tension - Inspect and Adjust" (8-1).

5. Remove sealing tapes from the openings of the engine.
6. Connect pipes.

Note: For engine oil, refer to "ENGINE OIL" (5-1).

7. Fill the fuel tank with fuel, and bleed the fuel system.

Note: For bleeding fuel system, refer to "Fuel system - Bleed air" (8-3).

8. Inspect the entire engine.
9. Remove the rocker covers, and lubricate the valve mechanisms.
10. Run the engine with starter for approx. 10 seconds while pulling the stop lever. Stop the operation for approx. 1 minute, then, repeat the operation two or three times.
11. Make sure the engine oil pressure rises.
12. Conduct a warm up operation for a sufficient duration.

Note: For starting the engine, refer to "Starting" (3-4).

13. Apply load and increase the engine speed to the rated speed.

Storing the engine in an operable condition for 3 months or more

When the engine is not operated during storage of 3 months or more, internal engine parts can rust and lose oil film. As a result, the engine can seize when it is started after storage. To prevent such a risk, the engine must be operated periodically during storage.

Operating the engine for maintenance

Operate the engine for maintenance at least once a month as described below.

1. Run the engine with starter for approx. 10 seconds while pulling the stop lever. Stop the operation for approx. 1 minute, then, repeat the operation two or three times.
2. Make sure the engine oil pressure rises.
3. Operate the engine about 5 to 10 minutes under no load as the maintenance operation.

Note: For starting the engine, refer to "Starting" (3-4).

Lifting the engine

WARNING

To lift the engine, use wire ropes, shackles and slings capable of supporting the weight of the engine.
Attach the wire rope to the hangers provided on the engine using a correct sling.
Keep the engine balanced during lifting by considering the engine's center of gravity.
Keep the angle formed by slings attached to hangers within 60°. If the angle exceeds this limit, excessive load could be imposed on the hangers and this could damage the hangers and result in a serious accident.
Attach wire ropes to the hangers after removing the pipe cover and the insulator near the hangers. To prevent wire ropes from contacting the engine, use a cloth or other soft padding.

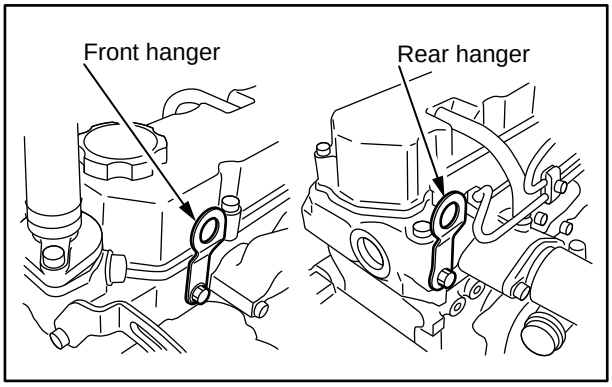

Fig. 10-1 Hangers

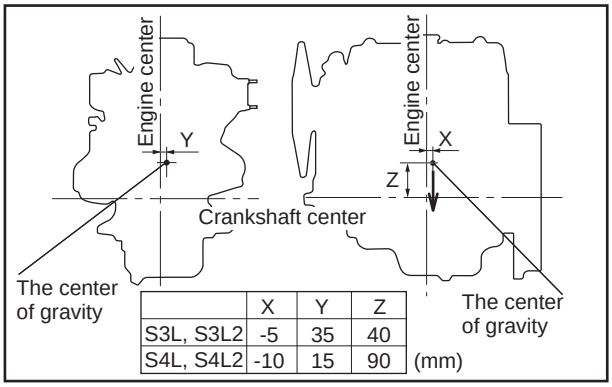

	X	Y	Z
S3L, S3L2	-5	35	40
S4L, S4L2	-10	15	90

(mm)

Fig. 10-2 Engine's center of gravity (standard specification)

Chapter 11 TROUBLESHOOTING

General precautions

Contact a dealer of Mitsubishi Heavy Industries, Ltd. for repair service

Repairing a malfunctioning engine may require special equipment or involve potentially dangerous work, except for relatively simple procedures such as the change and addition of fuel, engine oil and coolant. In the event of the engine failure, contact a dealer of Mitsubishi Heavy Industries, Ltd.

Considerations before work

Before troubleshooting, consider possible causes of the problem and try to find out if the same problem has occurred in the past.

Check the parts that may be causing the problem in the most efficient order.

When disassembling a component, pay close attention to the disassembly sequence so that you can reassemble the component in reverse order of disassembly.

Cautions against contamination

Dust and foreign materials are the most common cause of rapid wear of parts.

When disassembling a component, take measures to prevent dust and foreign materials from entering the component being disassembled.

Cautions regarding parts handling

Handle parts carefully.

When replacing parts, use only genuine parts by referring to the parts catalogue.

Work safety

Be sure to use wrenches of the correct size. Using a wrench of the wrong size not only damages nuts but can also cause the personal injury.

Use correct tools and perform work with utmost caution.

Be sure to accurately estimate the weight of the part being dismounted. If the removed part is much heavier than you have estimated, it may fall down during lifting and can result in the damage to the parts or personal injury.

Troubleshooting

The starter does not crank or cranks slowly, resulting in start failure

Table 11-1 The starter does not crank or cranks slowly, resulting in start failure

Cause		Remedies
Electrical system	Faulty wire connection	♦Check the DC fuse. ♦Check wiring connection between battery, starter and starter switch.
	Insufficiently charged battery	♦Check alternator. (Refer to P8-18) ♦Check and adjust belt. (Refer to P8-1)
	Faulty battery	♦Check specific gravity of battery electrolyte. (Refer to P8-17) ♦Charge battery. ♦Change battery.
	Faulty starter or starter relay	♦Consult a dealer of Mitsubishi Heavy Industries, Ltd.
Lubricating system	Oil viscosity too high	♦Use appropriate engine oil. (Refer to P5-1)
	Excessive oil	♦Check amount of engine oil and lubrication system. (Refer to P3-2)
Engine mechanical	Rapid wear of sliding parts, or locked	♦Consult a dealer of Mitsubishi Heavy Industries, Ltd.

The starter cranks, but the engine does not start

Table 11-2 The starter cranks, but the engine does not start

Cause		Remedies
Fuel system	Run out of fuel, blocked pipe	♦Inspect fuel tank, supply fuel, bleed air. (Refer to P8-2) ♦Check fuel pipes, valves.
	Improper fuel property	♦Use appropriate fuel. (Refer to P4-1) ♦Remove dust, water impurities. (Refer to P8-2)
	Fuel leakage in fuel pipes and injection pipes.	♦Check faults and retighten fuel pipes and injection pipes. ♦Consult a dealer of Mitsubishi Heavy Industries, Ltd.
	Clogged fuel filter	♦Inspect and replace fuel filter. (Refer to P8-5) or (Refer to P8-6) ♦Gauze filter - Clean
	Faulty fuel feed pump	♦Consult a dealer of Mitsubishi Heavy Industries, Ltd.
	Faulty fuel injection pump	♦Check the rack movement. ♦Consult a dealer of Mitsubishi Heavy Industries, Ltd.
	Faulty fuel injection nozzle	♦Consult a dealer of Mitsubishi Heavy Industries, Ltd.
Air intake system	Insufficient amount of air	♦Clean, inspect and replace pre-cleaner. (Refer to P8-15) ♦Clean, inspect and replace air cleaner element. (Refer to P8-16)
Control system	Faulty governor	♦Fuel control link - Check ♦Consult a dealer of Mitsubishi Heavy Industries, Ltd.
Basic engine	Low compression pressure	♦Consult a dealer of Mitsubishi Heavy Industries, Ltd.

Output decrease

Table 11-3 Output decrease

Cause		Remedies
Fuel system	Improper fuel property	♦Use appropriate fuel. (Refer to P4-1)
	Clogged fuel filter	♦Inspect and replace fuel filter. (Refer to P8-5) or (Refer to P8-6) ♦Gauze filter - Clean
	Faulty fuel feed pump	♦Consult a dealer of Mitsubishi Heavy Industries, Ltd.
	Faulty fuel injection pump	♦Consult a dealer of Mitsubishi Heavy Industries, Ltd.
	Faulty fuel injection nozzle	♦Consult a dealer of Mitsubishi Heavy Industries, Ltd.
	Faulty fuel injection timing	♦Consult a dealer of Mitsubishi Heavy Industries, Ltd.
	Improper amount of injected fuel	♦Check fuel injection pump rack stroke. ♦Consult a dealer of Mitsubishi Heavy Industries, Ltd.
Cooling system	Overheat, overcooled	♦Check fan and radiator. ♦Check control system. ♦Consult a dealer of Mitsubishi Heavy Industries, Ltd.
Inlet and exhaust systems	Insufficient amount of air	♦Check turbocharger. (Refer to P8-14) ♦Clean, inspect and replace pre-cleaner. (Refer to P8-15) ♦Clean, inspect and replace air cleaner element. (Refer to P8-16) ♦Check intake air pressure and leakage of intake air. ♦Check intake air temperature and ventilation device. ♦Consult a dealer of Mitsubishi Heavy Industries, Ltd.
	Increase resistance of exhaust air.	♦Check turbocharger. (Refer to P8-14) ♦Check exhaust pipes and silencer. ♦Consult a dealer of Mitsubishi Heavy Industries, Ltd.
Basic engine	Low compression pressure	♦Consult a dealer of Mitsubishi Heavy Industries, Ltd.
	Faulty valve timing	♦Consult a dealer of Mitsubishi Heavy Industries, Ltd.
	Rapid wear of sliding parts	♦Consult a dealer of Mitsubishi Heavy Industries, Ltd.
Control system	Faulty governor control	♦Consult a dealer of Mitsubishi Heavy Industries, Ltd.

Exhaust smoke is white or blue

Table 11-4 Exhaust smoke is white or blue

Cause		Remedies
Fuel system	Improper fuel property	♦Check cetane index, and use appropriate fuel. (Refer to P4-1)
	Faulty fuel injection timing	♦Consult a dealer of Mitsubishi Heavy Industries, Ltd.
	Faulty fuel injection nozzle	♦Consult a dealer of Mitsubishi Heavy Industries, Ltd.
	Uneven fuel injection	♦Check ignition noise, exhaust smoke temperature. ♦Consult a dealer of Mitsubishi Heavy Industries, Ltd.
	Incorrect fuel injection timing	♦Consult a dealer of Mitsubishi Heavy Industries, Ltd.
Lubricating system	Combustion of engine oil	♦Check amount of engine oil and lubrication system. (Refer to P3-2) ♦Consult a dealer of Mitsubishi Heavy Industries, Ltd.
Cooling system	Overcooled	♦Check radiator. (Refer to P8-13) ♦Check control system. ♦Thermostat - Inspect ♦Consult a dealer of Mitsubishi Heavy Industries, Ltd.
Basic engine	Faulty valve timing	♦Consult a dealer of Mitsubishi Heavy Industries, Ltd.
	Low compression pressure	♦Consult a dealer of Mitsubishi Heavy Industries, Ltd.

Exhaust smoke is black or charcoal

Table 11-5 Exhaust smoke is black or charcoal

Cause		Remedies
Fuel system	Improper fuel property	♦Use appropriate fuel. (Refer to P4-1)
	Faulty fuel feed pump	♦Consult a dealer of Mitsubishi Heavy Industries, Ltd.
	Faulty fuel injection pump	♦Consult a dealer of Mitsubishi Heavy Industries, Ltd.
	Faulty fuel injection nozzle	♦Consult a dealer of Mitsubishi Heavy Industries, Ltd.
	Faulty fuel injection timing	♦Consult a dealer of Mitsubishi Heavy Industries, Ltd.
	Uneven fuel injection	♦Check exhaust smoke temperature. ♦Consult a dealer of Mitsubishi Heavy Industries, Ltd.
Inlet and exhaust systems	Insufficient amount of air	♦Check turbocharger. (Refer to P8-14) ♦Clean, inspect and replace pre-cleaner. (Refer to P8-15) ♦Clean, inspect and replace air cleaner element. (Refer to P8-16) ♦Check intake air pressure and leakage of intake air. ♦Check intake air temperature and ventilation device. ♦Consult a dealer of Mitsubishi Heavy Industries, Ltd.
	Increase resistance of exhaust air.	♦Check turbocharger. (Refer to P8-14) ♦Check exhaust pipes and silencer. ♦Consult a dealer of Mitsubishi Heavy Industries, Ltd.
Basic engine	Low compression pressure	♦Consult a dealer of Mitsubishi Heavy Industries, Ltd.
	Faulty valve timing	♦Consult a dealer of Mitsubishi Heavy Industries, Ltd.
	Rapid wear of sliding parts	♦Consult a dealer of Mitsubishi Heavy Industries, Ltd.
Control system	Increase in load	♦Check control system. ♦Consult a dealer of Mitsubishi Heavy Industries, Ltd.

Fuel consumption is high

Table 11-6 Fuel consumption is high

Cause		Remedies
Fuel system	Faulty fuel injection nozzle	♦Consult a dealer of Mitsubishi Heavy Industries, Ltd.
	Faulty fuel injection timing	♦Consult a dealer of Mitsubishi Heavy Industries, Ltd.
	Improper fuel property	♦Use appropriate fuel. (Refer to P4-1)
	Fuel leakage in fuel pipes and injection pipes.	♦Check faults and retighten fuel pipes and injection pipes. ♦Consult a dealer of Mitsubishi Heavy Industries, Ltd.
Cooling system	Overcooled	♦Check radiator. (Refer to P8-13) ♦Check control system. ♦Thermostat - Inspect ♦Consult a dealer of Mitsubishi Heavy Industries, Ltd.
Inlet and exhaust systems	Insufficient amount of air	♦Check turbocharger.(Refer to P8-14) ♦Clean, inspect and replace pre-cleaner. (Refer to P8-15) ♦Clean, inspect and replace air cleaner element. (Refer to P8-16) ♦Check intake air pressure and leakage of intake air. ♦Check intake air temperature and ventilation device. ♦Consult a dealer of Mitsubishi Heavy Industries, Ltd.
	Increase resistance of exhaust air.	♦Check turbocharger. (Refer to P8-14) ♦Check exhaust pipes and silencer. ♦Consult a dealer of Mitsubishi Heavy Industries, Ltd.
Basic engine	Low compression pressure	♦Consult a dealer of Mitsubishi Heavy Industries, Ltd.
	Faulty valve timing	♦Consult a dealer of Mitsubishi Heavy Industries, Ltd.
	Rapid wear of sliding parts	♦Consult a dealer of Mitsubishi Heavy Industries, Ltd.

Engine oil consumption is high

Table 11-7 Engine oil consumption is high

Cause		Remedies
Fuel system	Faulty fuel injection timing	♦Consult a dealer of Mitsubishi Heavy Industries, Ltd.
Lubricating system	Oil leakage to the outside of engine	♦Check oil leakage. ♦Consult a dealer of Mitsubishi Heavy Industries, Ltd.
	Engine oil viscosity too low	♦Use appropriate oil viscosity. (Refer to P5-3)
	Engine oil temperature is high.	♦Check amount of engine oil and lubrication system. (Refer to P3-2) ♦Consult a dealer of Mitsubishi Heavy Industries, Ltd.
Cooling system	Overheating	♦Check radiator. (Refer to P8-13) ♦Check control system. ♦Thermostat - Inspect ♦Consult a dealer of Mitsubishi Heavy Industries, Ltd.
Inlet and exhaust systems	Spread oil to intake part	♦Check oil leakage to the turbocharger. ♦Consult a dealer of Mitsubishi Heavy Industries, Ltd.
	Wear of valve operating system	♦Consult a dealer of Mitsubishi Heavy Industries, Ltd.
Basic engine	Wear of sliding parts	♦Consult a dealer of Mitsubishi Heavy Industries, Ltd.
Control system	Increase in load	♦Check control system. ♦Consult a dealer of Mitsubishi Heavy Industries, Ltd.

Overheating

Table 11-8 Overheating

Cause		Remedies
Cooling system	Low coolant level	♦Check coolant leakage. ♦Check coolant level. (Refer to P3-3)
	Faulty water pump operation	♦Consult a dealer of Mitsubishi Heavy Industries, Ltd.
	Faulty thermostat operation	♦Consult a dealer of Mitsubishi Heavy Industries, Ltd.
	Faulty radiator operation	♦Check and clean radiator and radiator filler cap. (Refer to P8-13)
Control system	Increase in load	♦Check fuel injection pump rack stroke. ♦Check control system. ♦Consult a dealer of Mitsubishi Heavy Industries, Ltd.
Basic engine	Rapid wear of sliding parts	♦Consult a dealer of Mitsubishi Heavy Industries, Ltd.

Low engine oil pressure

Table 11-9 Low engine oil pressure

Cause		Remedies
Lubricating system	Insufficient amount of engine oil	♦Check amount of engine oil and lubrication system. (Refer to P3-2)
	Faulty engine oil property (viscosity)	♦Analyze oil property. Use appropriate engine oil. (Refer to P5-1)
	Oil temperature too high	♦Check coolant system. ♦Consult a dealer of Mitsubishi Heavy Industries, Ltd.
	Oil filter clogged	♦Inspect and replace oil filter. (Refer to P8-7)
	Faulty oil pump operation	♦Consult a dealer of Mitsubishi Heavy Industries, Ltd.
	Faulty relief valve operation	♦Consult a dealer of Mitsubishi Heavy Industries, Ltd.
Control system	Faulty pressure unit operation	♦Check control system and wire. ♦Consult a dealer of Mitsubishi Heavy Industries, Ltd.
Basic engine	Increase in load	♦Check control system. ♦Consult a dealer of Mitsubishi Heavy Industries, Ltd.
	Rapid wear of sliding parts	♦Consult a dealer of Mitsubishi Heavy Industries, Ltd.
	Increase clearance of sliding part.	♦Consult a dealer of Mitsubishi Heavy Industries, Ltd.

When fuel has run out

When fuel runs out while engine is running and the engine has stopped, restart the engine as described below.

1. Return the starter switch to the "OFF" position.
2. Add fuel to the fuel tank.
   For filling fuel tank, refer to "Fuel tank oil level - Check" (3-2).
3. Bleed air from the fuel system.
   For bleeding fuel system, refer to "Fuel system - Bleed air" (8-3).
4. Restart the engine.
   For starting the engine, refer to "Starting" (3-4).

Chapter 12 MAIN SPECIFICATIONS

Main specifications

Table 12-1 Main specifications

Item		Specifications				
Engine model		S3L	S3L2	S4L	S4L2	S4L2-T
Type		Vertical water cooled, 4 stroke cycle diesel engine				Vertical water cooled, 4 stroke cycle, turbocharged diesel engine
No. of cylinders - arrangement		3 cylinder in-line		4 cylinder in-line		
Cylinder bore × stroke		φ78 × 78.5 mm [3.07 × 3.09 in.]	φ78 × 92 mm [3.07 × 3.62 in.]	φ78 × 78.5 mm [3.07 × 3.09 in.]	φ78 × 92 mm [3.07 x 3.62 in.]	
Displacement		1.125 L [0.3 U.S. gal.]	1.318 L [0.3 U.S. gal.]	1.500 L [0.4 U.S. gal.]	1.758 L [0.5 U.S. gal.]	
Conbustion type		Swirl chamber				
Compression ratio		22 : 1				
Firing order		1 - 3 - 2		1 - 3 - 4 - 2		
Direction of rotation		Counterclockwise as viewed from flywheel side				
Dimensions (L x W x H)		536 × 433 × 572 mm [21.10 x 17.05 x 22.52 in.]		620 × 433 × 572 mm [24.41 x 17.05 x 22.52 in.]		620 × 452 × 640 mm [24.41 x 17.80 x 25.20 in.]
Dry weight		Approx. 140 kg [309 lb.]		Approx. 155 kg [342 lb.]		Approx. 174 kg [384 lb.]
Fuel		Diesel fuel (equivalent for JIS K 2204)				
Fuel injection pump		PFR type				
Fuel filter		Cartridge or cock type paper-element				
Fuel injection nozzle		Throttle type				
Initial fuel injection pressure		13.73 MPa {140 kgf/cm^2} [1991 psi]				
Lubrication method		Forced circulation (pressure feed by oil pump)				
Lubrication oil		Class CF or CH-4 oil (API service classification)				
Engine oil capacity	Standard Oil pan	Whole engine: Approx. 4.5 L [1.2 U.S. gal.], Oil pan Max/Min: Approx. 3.7 L [1.0 U.S. gal.]/Approx. 2.2 L [0.6 U.S. gal.]		Whole engine: Approx. 6.0 L [1.6 U.S. gal.], Oil pan Max/Min: Approx 5.5 L [1.5 U.S. gal.] /Approx. 3.7 L [1.0 U.S. gal.]		
	Deep type oil pan	Whole engine: Approx. 6.2 L [1.6 U.S. gal.], Oil pan Max/Min: Approx 5.7 L [1.5 U.S. gal.]/Approx. 3.1 L [0.8 U.S. gal.]		Whole engine: Approx. 8.2 L [2.2 U.S. gal.], Oil pan Max/Min: Approx 7.7 L [2.0 U.S. gal.] /Approx. 4.2 L [1.1 U.S. gal.]		
Oil filter		Cartridge type paper-element				
Oil cooler		-				Water cooled multi-plate
Cooling method		Forced water cooling by centrifugal pump				
Coolant capacity		Approx. 1.8 L [0.5 U.S. gal.] (basic engine only)		Approx. 2.5 L [0.7 U.S. gal.] (basic engine only)		
Starting system		Electric motor starting				
Starter		DC 12 V - 1.7 kW		DC 12 V - 2.0 kW		

Table 12-1 Main specifications

Item	Specifications	
Alternator	DC 12 V - 50 A	
Turbocharger	-	Mitsubishi TD025/TD03

Note: (a) The specifications above are subject to change without prior notice.

(b) The specifications above are described for the standard model. The special model specifications may differ from those of standard model.

Printed in Japan

Pub. No. 99610-31120

10.2. Appendix B - Alternator user and maintenance manual

User guide and maintenance manual

LEROY SOMER

Alternator

LSA40 – 4 POLES SHUNT & AREP

4455_b
01/02/2011

33522922601_0_1

LEROY SOMER®

4455 en - 2011.02 / b

This manual is to be given to the end user

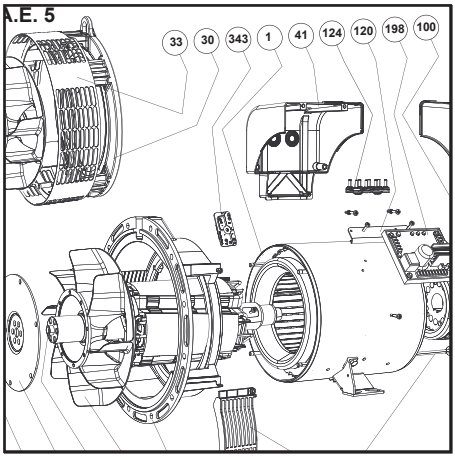

LSA 40 - 4 POLES

ALTERNATORS

Installation and maintenance

LSA 40 - 4 POLES
ALTERNATORS

This manual concerns the alternator which you have just purchased.

We wish to draw your attention to the contents of this maintenance manual.

SAFETY MEASURES

Before using your machine for the first time, it is important to read the whole of this installation and maintenance manual.

All necessary operations and interventions on this machine must be performed by a qualified technician.

Our technical support service will be pleased to provide any additional information you may require.

The various operations described in this manual are accompanied by recommendations or symbols to alert the user to the potential risk of accidents. It is vital that you understand and take notice of the different warning symbols used.

WARNING

Warning symbol for an operation capable of damaging or destroying the machine or surrounding equipment.

Warning symbol for general danger to personnel.

Warning symbol for electrical danger to personnel.

WARNING SYMBOLS

We wish to draw your attention to the following 2 safety measures which must be complied with:

a) During operation, do not allow anyone to stand in front of the air outlet guards, in case anything is ejected from them.

b) Do not allow children younger than 14 to go near the air outlet guards.

A set of self-adhesive stickers depicting the various warning symbols is included with this maintenance manual. They should be positioned as shown in the drawing below once the machine has been fully installed.

WARNING
The alternators must not be put into service until the machines in which they are to be incorporated have been declared compliant with Directives EC and plus any other directives that may be applicable.

Note: LEROY-SOMER reserves the right to modify the characteristics of its products at any time in order to incorporate the latest technological developments. The information contained in this document may therefore be changed without notice.

Copyright 2005 : MOTEURS LEROY-SOMER
This document is the property of:
MOTEURS LEROY SOMER.
It may not be reproduced in any form without prior authorization.
All brands and models have been registered and patents applied for.

LSA 40 - 4 POLES
ALTERNATORS

CONTENTS

1 - RECEIPT 4
1.1 - Standards and safety measures 4
1.2 - Inspection 4
1.3 - Identification 4
1.4 - Storage 4
1.5 - Applications 4
1.6 - Contraindications to use 4

2 - TECHNICAL CHARACTERISTICS 5
2.1 - Electrical characteristics 5
2.2 - Mechanical characteristics 5

3 - INSTALLATION 6
3.1 - Assembly 6
3.2 - Checks prior to first use 7
3.3 - Terminal connection diagrams 7
3.4 - Commissioning 10
3.5 - Setting up 10

4 - SERVICING - MAINTENANCE 11
4.1 - Safety measures 11
4.2 - Routine maintenance 11
4.3 - Fault detection 11
4.4 - Mechanical defects 12
4.5 - Electrical faults 12
4.6 - Dismantling, reassembly 14
4.7 - Table of characteristics 16

5 - SPARE PARTS 18
5.1 - First maintenance parts 18
5.2 - Technical support service 18
5.3 - Exploded views, parts list and tightening torque 19

EC declaration of incorporation 22

LSA 40 - 4 POLES
ALTERNATORS

1 - RECEIPT

1.1 - Standards and safety measures

Our alternators comply with most international standards.
See the EC Declaration of Incorporation on the last page.

1.2 - Inspection

On receipt of your alternator, check that it has not suffered any damage in transit. If there are obvious signs of knocks, contact the transporter (you may be able to claim on their insurance) and after a visual check, turn the machine by hand to detect any malfunction.

1.3 - Identification

The alternator is identified by means of a nameplate fixed on the machine (see drawing).
Make sure that the nameplate on the machine conforms to your order.
The machine name is defined according to various criteria, for example :
LSA 40 S4 J6/4
- LSA : name used in the PARTNER range
  M : Marine
  C : Cogeneration
  T : Telecommunications
- 40 : machine type
- S4 : model
- J : excitation system (C : AREP / J : SHUNT)
- 6/4 : winding number / number of poles.

1.3.1 - Nameplate

So that you can identify your machine quickly and accurately, we suggest you write its specifications on the nameplate below.

1.4 - Storage

Prior to commissioning, machines should be stored :
- away from humidity (< 90%); after a long period of storage, check the machine insulation (section 3.2.1). To prevent the bearings from becoming marked, do not store in an environment with significant vibration.

1.5 - Application

These alternators are mainly designed to produce electricity in the context of applications involving the use of generators.

1.6 - Contraindications to use

Use of the machine is restricted to operating conditions (environment, speed, voltage, power, etc) compatible with the characteristics indicated on the nameplate.

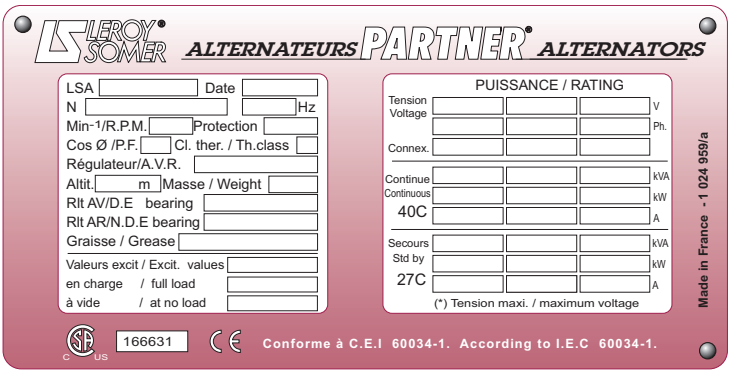

LSA 40 - 4 POLES
ALTERNATORS

2 - TECHNICAL CHARACTERISTICS

1.1 - Electrical characteristics

The PARTNER LSA 40 alternator is generator without sliprings and revolving field brushes, wound as “2/3 pitch”; 12-wire, with class H insulation and a field excitation system available in either “SHUNT” or “AREP” version .
Interference suppression conforms with standard EN 55011, group 1, class B.

2.1.1 - Electrical options

- Stator temperature detection probes.
- Space heaters.

2.2 - Mechanical characteristics

- Steel frame
- End shields in cast iron
- Greasable ball bearings
- Mounting arrangement

MD 35 :
single bearing with standard feet and SAE flanges/coupling discs.
B 34 :
two-bearing with SAE flange and standard cylindrical shaft extension.
- Drip-proof machine, self-cooled

2.1.1 - Mechanical options

- Protection against harsh environmentsh.
- Air input filter, air output labyrinth cowling.

Alternators fitted with air inlet filters should be derated by 5% (power).
To prevent excessive temperature rise caused by clogged filters, it is advisable to fit the stator winding with thermal sensors (PTC).

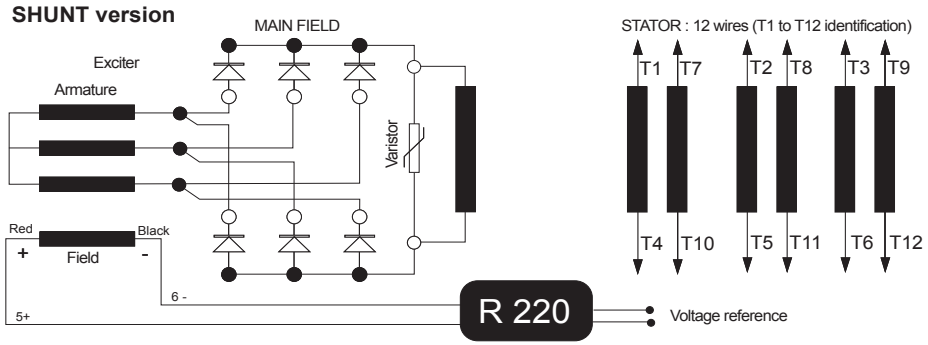

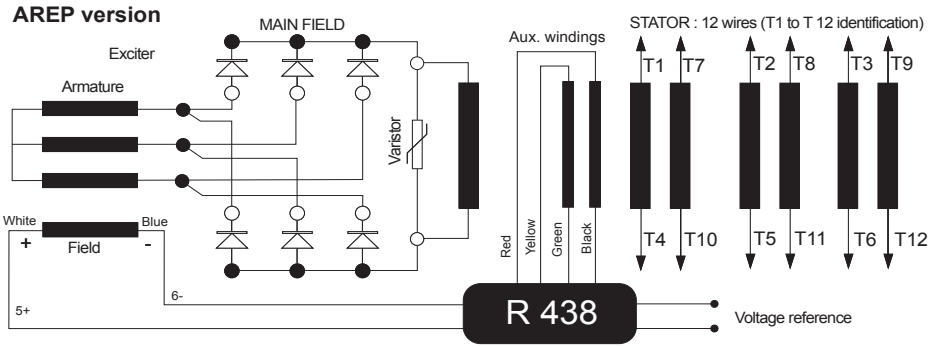

LSA 40 - 4 POLES
ALTERNATORS

3 - INSTALLATION

Personnel undertaking the various operations indicated in this section must wear personal protective equipment appropriate for mechanical and electrical hazards.

3.1 - Assembly

All mechanical handling operations must be undertaken using suitable equipment and the machine must be horizontal. Check how much the machine weighs (see 4.7) before choosing the lifting tool.

During this operation, do not allow anyone to stand under the load.

3.1.1 - Handling

The generously-sized lifting rings are for handling the alternator alone. They must not be used to lift the genset. The choice of lifting hooks or handles should be determined by the shape of these rings. Choose a lifting system which respects the integrity and the environment of the machine.

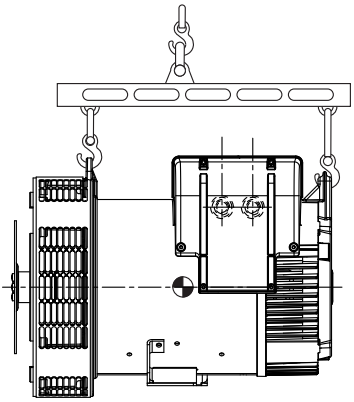

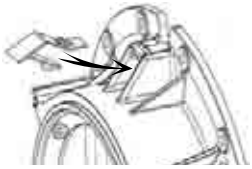

WARNING

After handling the machine using the lifting ring, snap on the plastic cover provided in the maintenance manual wallet.

3.1.2 - Coupling

3.1.2.1 - Single-bearing alternator

Before coupling the machines, check that they are compatible by:
- undertaking a torsional analysis of the transmission,
- checking the dimensions of the flywheel and its housing, the flange, coupling discs and offset.

WARNING

When coupling the alternator to the prime mover, do not use the fan to turn the alternator or rotor.
The holes of the coupling discs should be aligned with the flywheel holes by cranking the engine.
Make sure the machine is securely bedded in position during coupling.
Check that there is lateral play on the crankshaft.

3.1.2.2 - Double-bearing alternator

- Semi-flexible coupling

Careful alignment of the machines is recommended, checking that the lack of concentricity and parallelism of both parts of the coupling do not exceed 0.1 mm.
This alternator has been balanced with a 1/2 key.

3.1.3 - Location

The room where the alternator is placed must be ventilated to ensure that the ambient temperature cannot exceed the data on the nameplate.

3.2 - Checks prior to first use

3.2.1 - Electrical checks

Under no circumstances should an alternator, new or otherwise, be operated if the insulation is less than 1 megohm for the stator and 100,000 ohms for the other windings.

There are 2 possible methods for restoring the above minimum values.
a) Dry out the machine for 24 hours in a drying oven at a temperature of 110 °C (without the regulator).
b) Blow hot air into the air intake, having made sure that the machine is rotating with the exciter field disconnected.

Note : Prolonged standstill: In order to avoid these problems, we recommend the use of space heaters, as well as turning over the machine from time to time. Space heaters are only really effective if they are working continuously while the machine is stopped.

WARNING

Ensure that the alternator has the degree of protection matching the defined environmental conditions.

3.2.2 - Mechanical checks

Before starting the machine for the first time, check that:
- all fixing bolts and screws are tight,
- the cooling air is drawn in freely,
- the protective grilles and housing are correctly in place,
- the standard direction of rotation is clockwise as seen from the shaft end (phase rotation in order 1 - 2 - 3).
For anti-clockwise rotation, swap 2 and 3.
- the winding connection corresponds to the site operating voltage (see section 3.3).

3.3 - Terminal connection diagrams

To modify the connection, change the position of the stator cables on the terminals. The winding code is specified on the nameplate.

Any intervention on the alternator terminals during reconnection or checks should be performed with the machine stopped.

LSA 40 - 4 POLES
ALTERNATORS

Connection code	L.L voltage			Factory connection

A — 3 phases

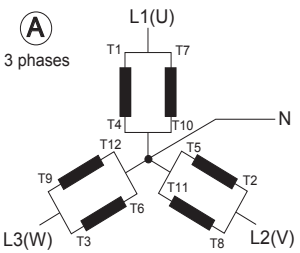

Winding	50 Hz	60 Hz
6	190 - 208	190 - 240
7	220 - 230	-
8	-	190 - 208

R 220 voltage sensing:
0 => (T8) / 110 V => (T11)
R 438 voltage sensing:
0 => (T3) / 220 V => (T2)

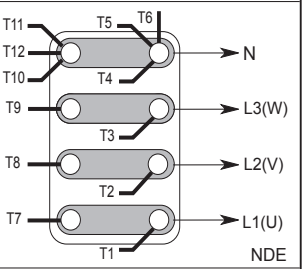

D — 3 phases

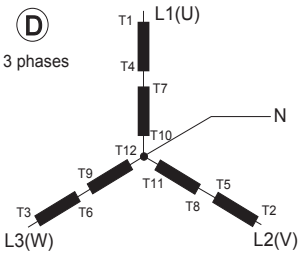

Winding	50 Hz	60 Hz
6	380 - 415	380 - 480
7	440 - 460	-
8	-	380 - 416

R 220 voltage sensing:
0 => (T8) / 110 V => (T11)
R 438 voltage sensing:
0 => (T3) / 380 V => (T2)

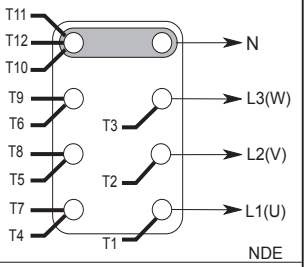

FF — 1 phase

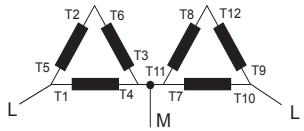

Tension LM = 1/2 tension LL
LM voltage = 1/2 LL voltage

Winding	50 Hz	60 Hz
6	220 - 240	220 - 240
7	250 - 260	-
8	200	220 - 240

R 220 voltage sensing:
0 => (T1) / 110 V => (T4)
R 438 voltage sensing:
0 => (T8) / 220 V => (T11)

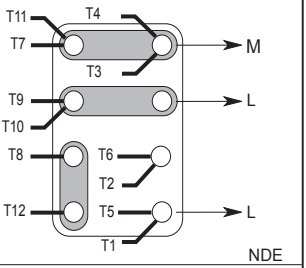

F — 1 phase or 3 phases

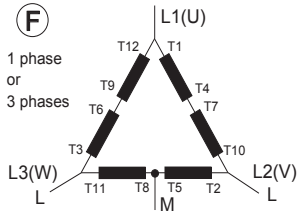

Tension LM = 1/2 tension LL
LM voltage = 1/2 LL voltage

Winding	50 Hz	60 Hz
6	220 - 240	220 - 240
7	250 - 260	-
8	200	220 - 240

R 220 voltage sensing:
0 => (T8) / 110 V => (T11)
R 438 voltage sensing:
0 => (T3) / 220 V => (T2)

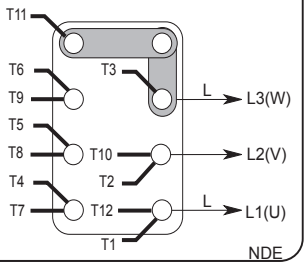

LSA 40 - 4 POLES
ALTERNATORS

Connection code

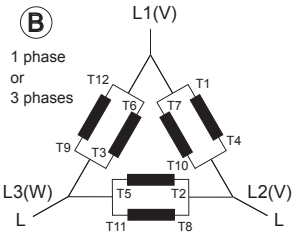

L.L voltage

Winding	50 Hz	60 Hz
6	110 - 120	120
7	120 - 130	-
8	-	110 - 120

R 220 voltage sensing:
0 => (T8) / 110 V => (T11)
R 438 voltage sensing:
0 => (T3) / 110 V => (T2)

Factory connection

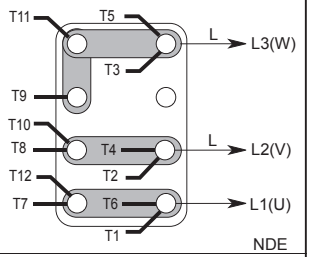

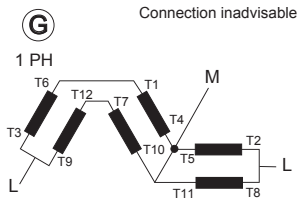

LM voltage = 1/2 LL voltage

Winding	50 Hz	60 Hz
6	220 - 240	220 - 240
7	250 - 260	-
8	200	220 - 240

R 220 voltage sensing:
0 => (T8) / 110 V => (T11)
R 438 voltage sensing:
0 => (T3) / 220 V => (T2)

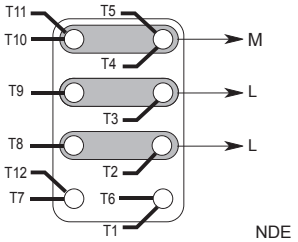

4-WIRE SINGLE-PHASE - type M or M1 DEDICATED WINDING

SERIAL CONNECTION

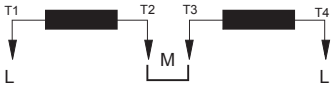

50/60 Hz voltage			Output		
L - L	L - M	Connect	L	L	M
220 230 240	110 115 120	T2 - T3	T1	T4	T2 - T3

R 220 voltage sensing: 0 => (T1) / 110 V => (T2)

PARALLEL CONNECTION

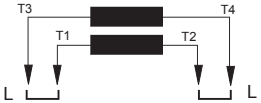

50/60 Hz voltage			Output		
L - L	L - M	Connect	L	L	M
110 115 120	- - -	T1 - T3 T2 - T4	T1-T3	T2 - T4	-

R 220 voltage sensing: 0 => (T1) / 110 V => (T2)

3.3.1 - Option connection diagram

R 791 interference suppression kit

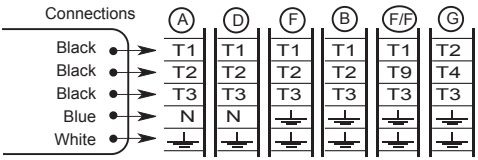

Voltage potentiometer

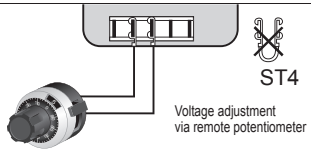

Space heater

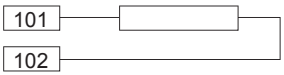

PTC stator sensors

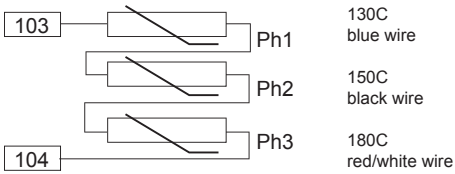

3.3.2- Connection checks

Electrical installations must comply with the current legislation in force in the country of use.
Check that:
- The residual circuit-breaker conforms to legislation on protection of personnel, in force in the country of use, and has been correctly installed on the alternator power output as close as possible to the alternator. (In this case, disconnect the wire of the interference suppression module linking the neutral).
- Any protection devices in place have not been tripped.
- If there is an external AVR, the connections between the alternator and the cabinet are made in accordance with the connection diagram.
- There is no short-circuit phase-phase or phase-neutral between the alternator output terminals and the generator set control cabinet (part of the circuit not protected by circuitbreakers or relays in the cabinet).
- The machine should be connected with the busbar separating the terminals as shown in the terminal connection diagram.

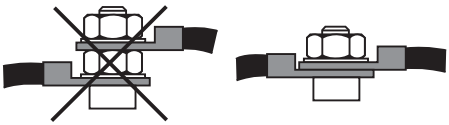

3.4 - Commissioning

The machine can only be started up and used if the installation is in accordance with the regulations and instructions defined in this manual.
The machine is tested and set up at the factory. When first used with no load, make sure that the drive speed is correct and stable (see the nameplate). With the regreasable bearing option, we recommend greasing the bearings at the time of commissioning (see 4.2.2).
On application of the load, the machine should achieve its rated speed and voltage; however, in the event of abnormal operation, the machine setting can be altered (follow the adjustment procedure in section 3.5). If the machine still operates incorrectly, the cause of the malfunction must be located (see section 4.4).

3.5 - Setting up

The various adjustments during tests must be made by a qualified engineer.
Ensure that the drive speed specified on the nameplate is reached before commencing adjustment.
After operational testing, replace all access panels or covers.
The AVR is used to make any adjustments to the machine.

4 - SERVICING - MAINTENANCE

4.1 - Safety measures

Servicing or troubleshooting must be carried out strictly in accordance with instructions so as to avoid the risk of accidents and to maintain the machine in its original state.

All such operations performed on the alternator should be undertaken by personnel trained in the commissioning, servicing and maintenance of electrical and mechanical components, who must wear personal protective equipment appropriate for mechanical and electrical hazards.

Before any intervention on the machine, ensure that it cannot be started by a manual or automatic system and that you have understood the operating principles of the system.

Warning : During and after running, the alternator will reach temperatures hot enough to cause injury, such as burns.

4.2 - Routine maintenance

4.2.1 - Checks after start-up

After approximately 20 hours of operation, check that all fixing screws on the machine are still tight, plus the general state of the machine and the various electrical connections in the installation.

4.2.2 - Bearings

The bearings are greased for life: approximate life of the grease (depending on use) = 20,000 hours or 3 years. Monitor the temperature rise in the bearings, which should not exceed 90°C above the ambient temperature. Should this value be exceeded, the alternator must be stopped and checks carried out.

4.2.3 - Electrical servicing

Commercially-available volatile degreasing agents can be used.

WARNING

Do not use: trichlorethylene, perchlorethylene, trichloroethane or any alkaline products.

These operations must be performed at a cleaning station, equipped with a vacuum system that collects and flushes out the products used.

The insulating components and the impregnation system are not at risk of damage from solvents. Avoid letting the cleaning product run into the slots.

Apply the product with a brush, sponging frequently to avoid accumulation in the housing. Dry the winding with a dry cloth. Let any traces evaporate before reassembling the machine.

4.2.4 - Mechanical servicing

WARNING

Cleaning the machine using water or a highpressure washer is strictly prohibited. Any problems arising from such treatment are not covered by our warranty.

Degreasing: Use a brush and detergent (suitable for paintwork).

Dusting: Use an air gun.

If the machine is fitted with air inlet and outlet filters, the maintenance personnel should clean them routinely at regular intervals. In the case of dry dust, the filter can be cleaned using compressed air and/or replaced if it is clogged.

After cleaning the alternator, it is essential to check the winding insulation (see sections 3.2 and 4.8).

4.3 - Fault detection

If, when commissioned, the alternator does not work normally, the source of the malfunction must be identified (see sections 4.4 and 4.5).

4.4 - Mechanical defects

Fault		Action
Bearing	Excessive overheating of one or both bearings (bearing temperature 80°C above the ambient temperature) (With or without abnormal bearing noise)	- If the bearing has turned blue or if the grease has turned black, change the bearing. - Bearing not fully locked (abnormal play in the bearing cage) - End shields incorrectly aligned
Abnormal temperature	Excessive overheating of alternator frame (more than 40° C above the ambient temperature)	- Air flow (inlet-outlet) partially clogged or hot air is being recycled from the alternator or engine - Alternator operating at too high a voltage (> 105% of Un on load) - Alternator overloaded
Vibrations	Too much vibration	- Misalignment (coupling) - Defective mounting or play in coupling - Rotor balancing fault (Engine - Alternator)
	Excessive vibration and humming noise coming from the machine	- Phase imbalance - Stator short-circuit
Abnormal noise	Alternator damaged by a significant impact, followed by humming and vibration	- System short-circuit - Misparalleling Possible consequences - Broken or damaged coupling - Broken or bent shaft end - Shifting and short-circuit of main field - Fan fractured or coming loose on shaft - Irreparable damage to rotating diodes/AVR, surge suppressor

4.5 - Electrical faults

Fault	Action	Effect	Check/Cause
No voltage at no load on start-up	Connect a new battery of 4 to 12 volts to terminals E- and E+, respecting the polarity, for 2 to 3 seconds	The alternator builds up and its voltage is still correct when the battery is removed.	- Lack of residual magnetism
		The alternator builds up but its voltage does not reach the rated value when the battery is removed.	- Check the connection of the voltage reference to the AVR - Faulty diode - Armature short-circuit
		The alternator builds up but its voltage disappears when the battery is removed.	- Faulty AVR - Field windings open circuit (check winding) - Main field winding open circuit (check the resistance)
Voltage too low	Check the drive speed	Correct speed	Check the AVR connections (possible AVR failure) - Field windings short-circuited - Rotating diodes burnt out - Main field winding short-circuited - Check the resistance
		Speed too low	Increase the drive speed (do not touch the AVR voltage pot. (P2) before running at the correct speed)
Voltage too high	Adjust AVR voltage potentiometer	Adjustment ineffective	Faulty AVR
Voltage oscillations	Adjust AVR stability potentiometer	If no effect : try normal / fast recovery modes (ST2)	- Check the speed : possibility of cyclic irregularity - Loose connections - Faulty AVR - Speed too low when on load (or LAM set too high)
Voltage correct at no load and too low when on load (*)	Run at no load and check the voltage between E+ et E- on the AVR	Voltage between E+ and E– SHUNT < 6V - AREP < 10V	- Check the speed (or LAM set too high)
		Voltage between E+ and E– SHUNT > 10V - AREP > 15V	- Faulty rotating diodes - Short-circuit in the main field. Check the resistance. - Faulty exciter armature. Check the resistance.
(*) Warning : During single-phase operation, check that the sensing wires from the AVR are connected to the correct output terminals.			
Voltage disappears during operation	Check the AVR, the surge suppressor, the rotating diodes, and replace any defective components	The voltage does not return to the rated value.	- Exciter winding open circuit - Faulty exciter armature - Faulty AVR - Main field open circuit or short-circuited
(**) Warning : The AVR internal protection may cut in (overload lost connection, short circuit).			

LSA 40 - 4 POLES
ALTERNATORS

4.5.1 - Checking the winding

You can check the winding insulation by performing a high voltage test. In this case, you must disconnect all AVR wires.

WARNING

Damage caused to the AVR in such conditions is not covered by our warranty.

4.5.2 - Checking the diode bridge

A diode in good working order should allow the current to flow only in the anode-to-cathode direction.

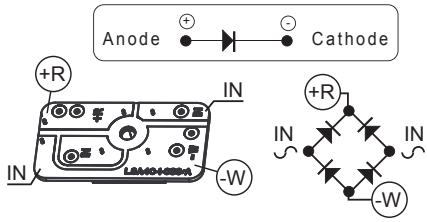

4.5.3 - Checking the windings and rotating diodes using separate excitation

During this procedure, make sure that the alternator is disconnected from any external load and inspect the terminal box to check that the connections are fully tightened.

1) Stop the unit, disconnect and isolate the AVR wires.
2) There are two ways of creating an assembly with separate excitation.

Assembly A: Connect a 12 V battery in series with a rheostat of approximately 50 ohms - 300 W and a diode on both exciter field wires (5+) and (6-).

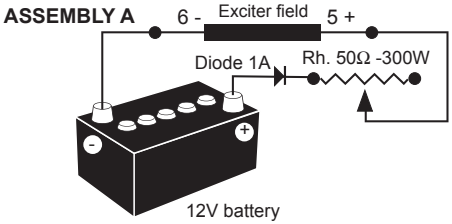

Assembly B: Connect a “Variac” variable power supply and a diode bridge on both exciter field wires (5+) and (6-).
Both these systems should have characteristics which are compatible with the field excitation power of the machine (see the nameplate).
3) Run the unit at its rated speed.
4) Gradually increase the exciter field current by adjusting the rheostat or the variac and measure the output voltages on L1 - L2 - L3, checking the excitation voltage and current at no load (see the machine nameplate or ask for the factory test report). When the output voltage is at its rated value and balanced within 1% for the rated excitation level, the machine is in good working order. The fault therefore comes from the AVR or its associated wiring (ie. sensing, auxiliary windings).

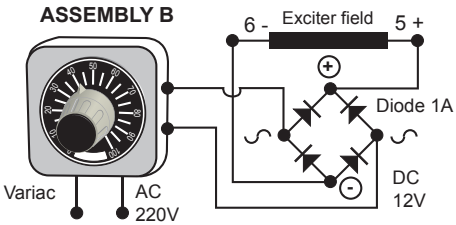

4.6 - Dismantling, reassembly (see sections 5.4.1. & 5.4.2.)

WARNING

During the warranty period, this operation should only be carried out in an LEROY-SOMER approved workshop or in our factory, otherwise the warranty may be invalidated.
Whilst being handled, the machine should remain horizontal (rotor not locked in position). Check how much the alternator weighs (see section 4.7) before choosing the lifting method.

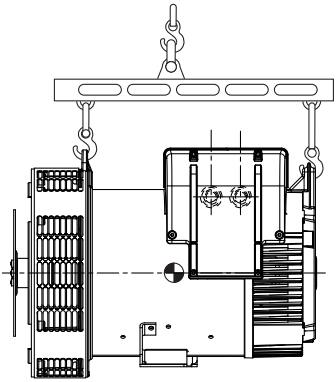

4.6.1 - Tools required

To fully dismantle the machine, we recommend using the tools listed below:
- 1 ratchet spanner + extension
- 1 torque wrench
- 1 set of flat spanners: 8 mm, 10 mm, 12 mm
- 1 socket set: 8, 10, 13 mm
- 1 socket TORX bit T20, T30
- 1 puller (eg. Facom: U35, U32/350)

4.6.2 -Screw tightening torque

See section 5.4.

The screws for fixing the feet on the housing and immobilising the stator must not be removed (bolt of the stator lower).

4.6.3 - Access to connections and the regulation system

The terminals and AVR are accessed directly by removing the terminal box lid (41).

4.6.4 - Accessing, checking and replacing the diode bridge

4.6.4.1 - Dismantling
- Remove the terminal box lid [41].
- Cut the fixing clamps of the exciter cables, disconnect E+, E- from the exciter.
- Remove the 4 nuts on the tie rods.
- Remove the NDE shield [36] using a puller: eg. U.32 - 350 (Facom).
- Unsolder the connections.
- Check the bridge using an ohmmeter or a battery lamp (see section 4.5.1).

4.6.4.2 - Reassembly
- Replace the bridges, respecting the polarity (see section 4.5.1).
- Resolder the connections.
- Fit a new O ring seal in the shield.
- Refit the NDE shield and pass the bundle of wires between the top bars of the shield.
- Replace the fixing clamps on the cables.
- Replace the terminal box lid [48].

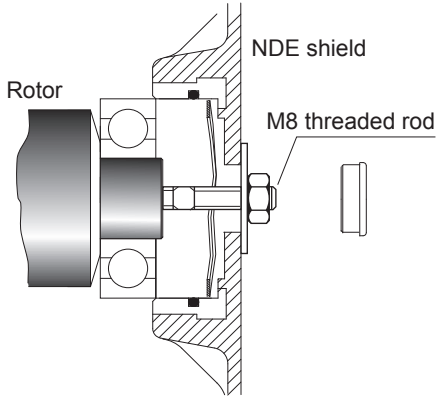

4.6.5 - Replacing the NDE bearing on single-bearing machines

4.6.5.1 - Dismantling

- Remove the NDE shield [36] (see section 4.6.4.1).
- Remove the ball bearing [70] using a screw puller.

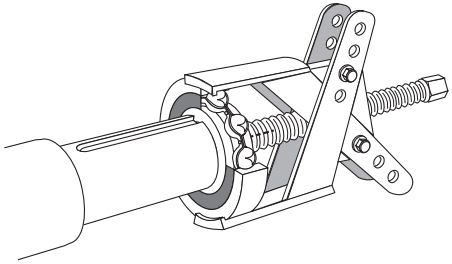

4.6.5.2 - Reassembly

- Heat the inner slipring of a new bearing by induction or in a drying oven at 80 °C (do not use an oil bath) and fit it to the alternator.
- Place the preloading wavy washer [79] in the flange and fit a new O ring seal [349].
- Replace the NDE bracket [36] (see section 4.6.4.2).

4.6.6 - Replacing the bearings on a two-bearing alternator

4.6.6.1 - Dismantling

- Uncouple the alternator from the prime mover.
- Remove the 8 assembly screws.
- Remove the DE flange [30].
- Remove the NDE bracket (see section 4.6.4.1).
- Remove both bearings [60] and [70] using a puller.

4.6.6.2 - Reassembly

- Fit new bearings after heating them by induction or in a drying oven at 80 °C (do not use an oil bath).
- Check that both the preloading wavy washer [79] and new O ring seal have been fitted [349] on the NDE bracket [36].
- Replace the DE flange [30], and tighten the 8 fixing screws.
- Check that the whole alternator is correctly assembled and that all screws are fully tightened.

4.6.7 - Accessing the main field and stator

4.6.7.1 - Dismantling

Follow the procedure for dismantling bearings (see sections 4.6.6.)
- Remove the coupling discs (single-bearing alternator) or the DE flange (two-bearing alternator) and insert a tube of the corresponding diameter on the shaft end or a support made according the following bellow.

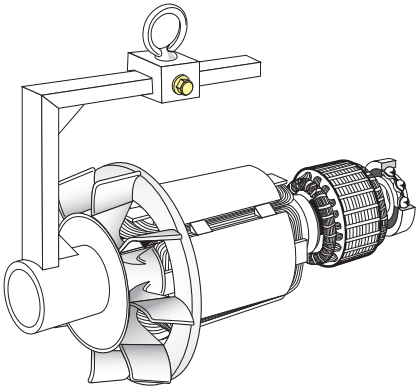

- Rest the rotor on one of its poles, then slide it out. Use the tube as a lever arm to assist dismantling.
- After extraction, be careful with the fan. It is necessary to replace the fan in case of disassembling.

NOTE: If intervention is required on the main field (rewinding, replacement of components), the rotor assembly must be rebalanced.

LSA 40 - 4 POLES
ALTERNATORS

4.6.7.2 - Reassembly

- Follow the dismantling procedure in reverse order.

Take care not to knock the windings when refitting the rotor in the stator.

If you replace the fan, respect the assembly guide according the following bellow. Use a tube and a screw.

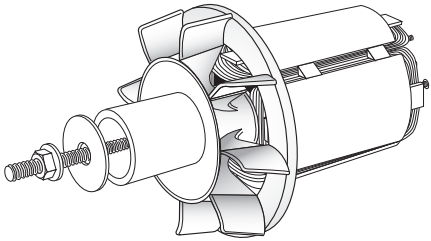

Follow the procedure for reassembling the bearings (see section 4.6.6).

4.7 - Table of characteristics

Table of average values:

Alternator - 4 pole - 50 Hz/60 Hz - Winding no. 6 and M or M1 connected in dedicated single-phase (400 V for the excitation values).

The voltage and current values are given for no-load operation and operation at rated load with separate field excitation. All values are given to ± 10% (for exact values, consult the test report) and are subject to change without prior warning. For 60 Hz operation, the resistance values are the same and the excitation current “i exc” is approximately 5 to 10% weaker.

4.7.1 - Three-phase: 4-pole, SHUNT excitation

Resistances at 20 °C (Ω)

LSA 40	L/N stator	Rotor	Field coil	Armature
VS1	0.66	3	12.5	1.40
VS2	0.48	3.3	12.5	1.40
S3	0.41	3.5	12.5	1.40
S4	0.35	3.8	12.5	1.40
M5	0.28	4.3	12.5	1.40
L7	0.23	4.8	12.5	1.40

Field excitation current i exc (A)
400V - 50 Hz

“i exc”: excitation current of the exciter field

LSA 40	No load	At rated load
VS1	0.9	2.1
VS2	0.8	2.1
S3	0.8	2.2
S4	0.8	2.2
M5	0.8	2.1
L7	0.8	2.1

4.7.2 - Three-phase: 4-pole, AREP excitation

Resistances at 20 °C (Ω)

LSA 40	L/N stator	Rotor	Field coil	Armature
VS1	0.66	3	6.6	1.4
VS2	0.48	3.3	6.6	1.4
S3	0.41	3.5	6.6	1.4
S4	0.35	3.8	6.6	1.4
M5	0.28	4.3	6.6	1.4
L7	0.23	4.8	6.6	1.4

Resistance of auxiliary windings at 20 °C (Ω)

LSA 40	X1, X2 auxil. wdgs	Z1, Z2 auxil. wdgs
VS1	0.45	0.38
VS2	0.36	0.31
S3	0.38	0.33
S4	0.34	0.36
M5	0.32	0.33
L7	0.31	0.29

LSA 40 - 4 POLES
ALTERNATORS

Field excitation current i exc (A)
400V - 50 Hz
"i exc": excitation current of the exciter field

LSA 40	No load	At rated load
VS1	1.2	3.2
VS2	1.1	3.2
S3	1.1	3.2
S4	1.1	3.1
M5	1.1	3
L7	1.1	3

4.7.3 - Dedicated single-phase: 4-pole, SHUNT excitation

Resistances at 20 °C (Ω)

LSA 40	L/N stator	Rotor	Field coil	Armature
VS1	0.3	3	12.5	1.4
VS2	0.22	3.3	12.5	1.4
S3	0.19	3.5	12.5	1.4
S4	0.16	3.8	12.5	1.4
M5	0.13	4.3	12.5	1.4
L7	0.11	4.8	12.5	1.4

Field excitation current i exc (A)
230V - 50 Hz
"i exc": excitation current of the exciter field

LSA 40	No load	At rated load
VS1	1.2	3.2
VS2	1.1	3.2
S3	1.1	3.2
S4	1.1	3.1
M5	1.1	3
L7	1.1	3

4.7.4 - Table of weights

(values given for information only)

LSA 40	Total weight (kg)	Rotor (kg)
VS1	85	30
VS2	90	30
S3	100	35
S4	105	35
M5	110	40
L7	125	45

After operational testing, it is essential to replace all access panels or covers.

5 - SPARE PARTS

5.1 - First maintenance parts

Emergency repair kits are available as an option.
They contain the following items:

Emergency kit SHUNT	ALT 040 KS 001
AVR R 220	-
Diode bridge assembly	-
Surge suppressor	-

Emergency kit AREP	ALT 040 KS 002
AVR R 438	-
Diode bridge assembly	-
Surge suppressor	-
AVR fuse	-

Single-bearing kit	ALT 422 KB 002
Non drive end bearing	-
«O» ring	-
Preloading (wavy) washer	-

Double-bearing kit	ALT 422 KB 001
Non drive end bearing	-
Drive end bearing	-
«O» ring	-
Preloading (wavy) washer	-

5.2 - Technical support service

Our technical support service will be pleased to provide any additional information you may require.

When ordering spare parts, you should indicate the complete machine type, its serial number and the information given on the nameplate.

Address your enquiry to your usual contact.

Part numbers should be identified from the exploded views and their description from the parts list.
Our extensive network of service centres can dispatch the necessary parts without delay.

To ensure correct operation and the safety of our machines, we recommend the use of original manufacturer spare parts.

In the event of failure to comply with this advice, the manufacturer cannot be held responsible for any damage.

After operational testing, it is essential to replace all access panels or covers.

LSA 40 - 4 POLES
ALTERNATORS

5.3 - Exploded view, parts list and tightening torque

5.3.1 - Single bearing, AREP or SHUNT

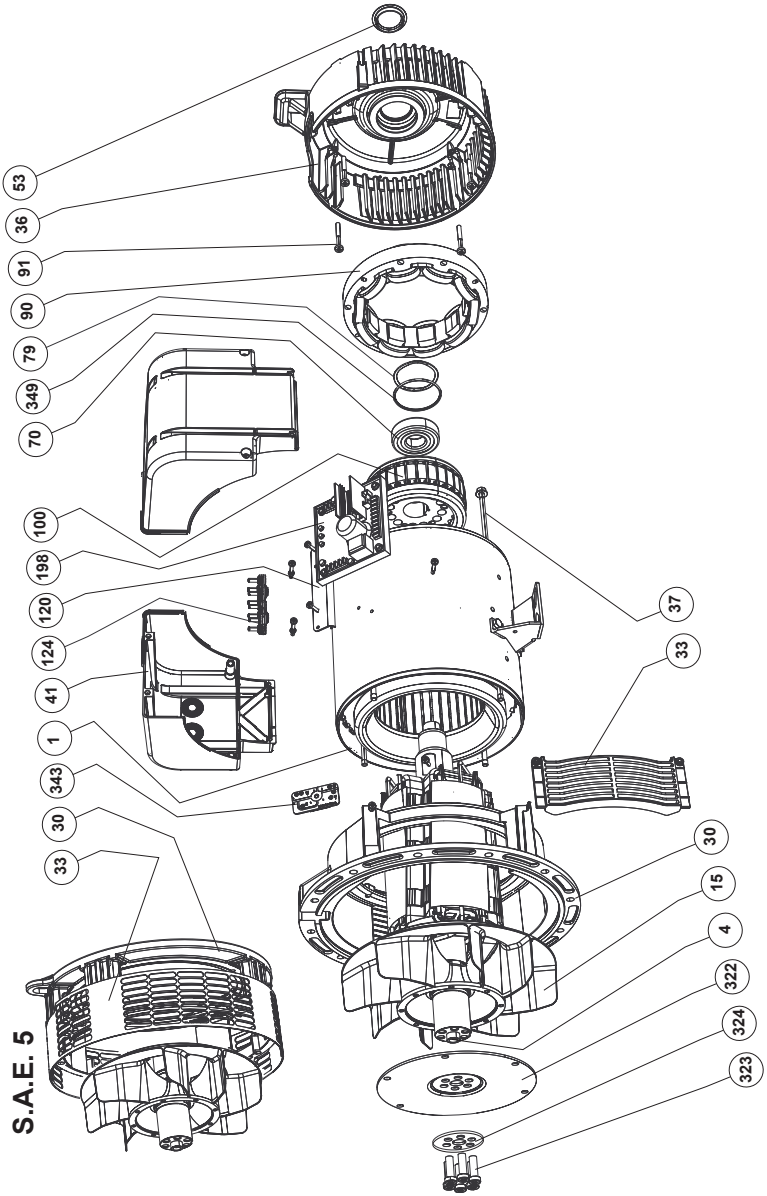

LSA 40 - 4 POLES
ALTERNATORS

5.3.2 - Two-bearing, AREP or SHUNT

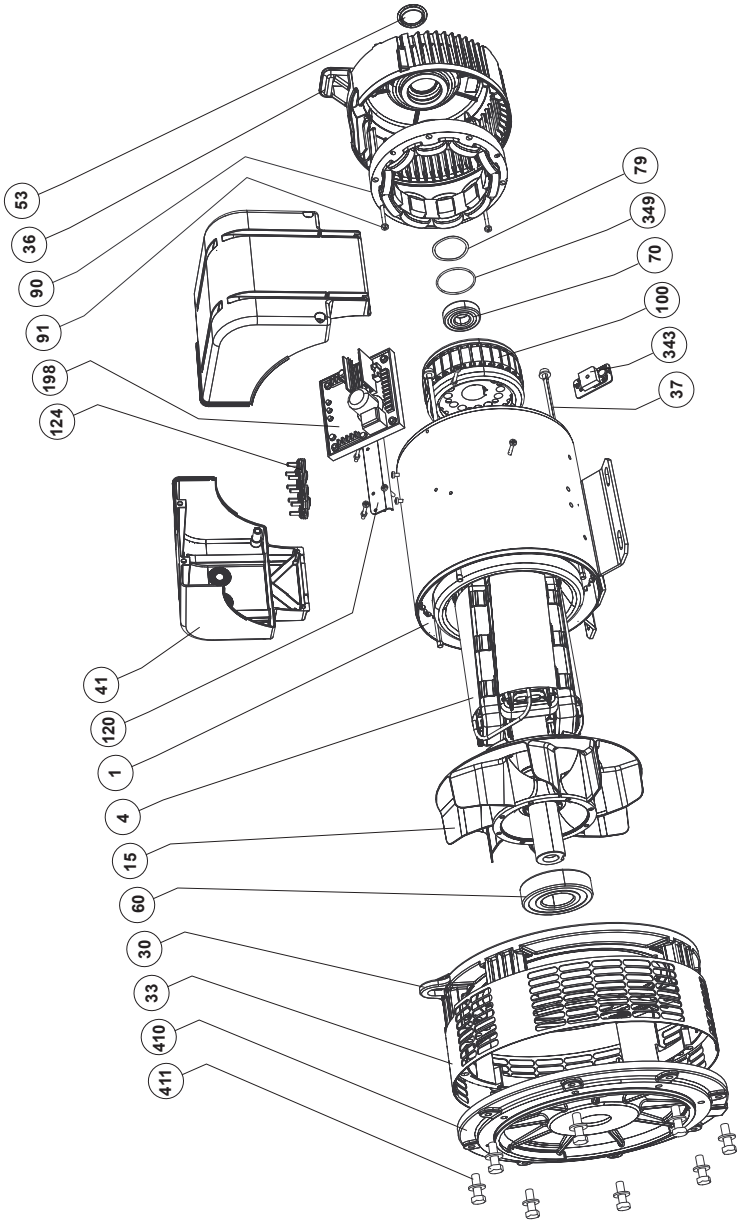

LSA 40 - 4 POLES
ALTERNATORS

Ref.	Qty	Description	Screw Ø	Torque N.m	Ref.	Qty	Description	Screw Ø	Torque N.m
1	1	Stator assembly	-	-	90	1	Wound exciter field	-	-
4	1	Rotor assembly	-	-	91	4	Field fixing screw	M6	10
15	1	Fan	M5	4	100	1	Exciter armature	-	-
28	1	Earth terminal	-	-	120	1	Terminal plate support	-	-
30	1	DE flange	-	-	124	1	Terminal plate	-	-
33	1	Air outlet grille	M5	4	198	1	Regulator (AVR)	-	-
36	1	N.D.E. bracket	-	-	322	1	Coupling disc	-	-
37	4	Tie rod	M8	20	323	6	Fixing screw	M10	66
41	2	Terminal box lid	M5	3.6	324	1	Clamping washer	-	-
53	1	Plug	-	-	343	2	Direct diode assembly	M5	4
60	1	DE bearing	-	-	349	1	O ring seal	-	-
70	1	NDE bearing	-	-	410	1	DE shield	-	-
79	1	Preloading wavy washer	-	-	411	8	Fixing screw	M10	40

Electric Power Generation Division

Declaration of CE compliance and incorporation

This Declaration applies to the generators designed to be incorporated into machines complying with the Machinery Directive Nr 2006/42/CE dated 17 May 2006.

MOTEURS LEROY-SOMER
Boulevard Marcellin Leroy
16015 ANGOULEME
France

MLS HOLICE STLO.SRO
SLADKOVSKEHO 43
772 04 OLOMOUC
Czech Republic

MOTEURS LEROY-SOMER
1, rue de la Burelle
Boite Postale 1517
45800 St Jean de Braye
France

Declares hereby that the electric generators of the types LSA 36 – 37– 40 – 42.2 – 43.2 – 44.2 – 46.2 – 47.2 – 49.1 – 50.2 – 51.2, as well as their derivatives, manufactured by Leroy Somer or on Leroy Somer's behalf, comply with the following International Standards and Directive :

- EN and IEC 60034 -1 and 60034 -5
- ISO 8528 – 3 " Reciprocating internal combustion engine driven alternating current generating sets. Part 3. Alternating current generators for generating sets "
- Low Voltage Directive Nr 2006/95/CE dated 12 December 2006.

Furthermore, these generators, designed in compliance with the Machine Directive Nr 2006/42, are therefore able to be incorporated into Electrical Gen-Sets complying with the following International Directives :

- Machinery Directive Nr 2006/42/CE dated 17 May 2006
- EMC Directive Nr 2004/108/CE dated 15 December 2004, as intrinsic levels of emissions and immunity are concerned

WARNING :

The here above mentioned generators should not be commissioned until the corresponding Gen-Sets have been declared in compliance with the Directives Nr 2006/42/CE et 2004/108/CE, as well as with the other relevant Directives.

Leroy Somer undertakes to transmit, in response to a reasoned request by the national authorities, relevant information on the generator.

Technical Managers
P Betge – J.Begué

4152 en – 2010.11 / d

www.leroy-somer.com

LEROY SOMER®

4291 en - 2010.11 / c

This manual is to be given to the end user

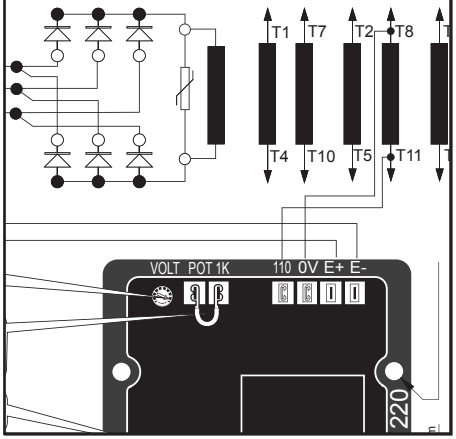

R220

A.V.R.

Installation and maintenance

R220
A.V.R.

This manual concerns the alternator A.V.R. which you have just purchased.

We wish to draw your attention to the contents of this maintenance manual. By following certain important points during installation, use and servicing of your A.V.R., you can look forward to many years of trouble-free operation.

SAFETY MEASURES

Before using your machine for the first time, it is important to read the whole of this installation and maintenance manual.

All necessary operations and interventions on this machine must be performed by a qualified technician.

Our technical support service will be pleased to provide any additional infor-mation you may require.

The various operations described in this manual are accompanied by recommen-dations or symbols to alert the user to potential risks of accidents. It is vital that you understand and take notice of the following warning symbols.

This A.V.R. can be incorporated in a machine marked C.E.

WARNING

Warning symbol for an operation capable of damaging or destroying the machine or surround-ing equipment.

Warning symbol for general danger to personnel.

Warning symbol for electrical danger to personnel.

Note: All rights are reserved to modify the characteristics of the products at any time in order to incorporate the latest technological developments. The information contained in this document may therefore be changed without notice.

R220
A.V.R.

CONTENTS

1 - SUPPLY **4**
1.1 - SHUNT excitation system 4

2 - R220 A.V.R. **4**
2.1 - Characteristics 4
2.2 - R220 AVR option 4

3 - INSTALLATION - COMMISSIONING **5**
3.1 - Electrical checks on the AVR 5
3.2 - Settings 5
3.3 - Electrical faults 6

4 - SPARE PARTS **7**
4.1 - Designation 7
4.2 - Technical support service 7

All such operations performed on the A.V.R. should be undertaken by personnel trained in the commissioning, servicing and maintenance of electrical and mechanical components.

The R220 is an IP00 product. It must be installed inside a unit so that this unit's cover can provide IP20 minimum total protection (it must only be installed on LS alternators in the appropriate location so that when viewed externally, it has a higher degree of protection than IP20).

Copyright 2005 : MOTEURS LEROY-SOMER
This document is the property of :
MOTEURS LEROY-SOMER
It may not be reproduced in any form without prior authorization.
All brands and models have been registered and patents applied for.

R220
A.V.R.

1 - SUPPLY

1.1 - SHUNT excitation system

The alternator with Shunt excitation is self-excited with an **R 220** voltage regulator.
The regulator monitors the exciter excitation current as a function of the alternator output voltage. Very simple in design, the alternator with shunt excitation has no sustaining short-circuit capacity.

2 - R220 A.V.R.

2.1 - Characteristics

- Storage : -55°C ; +85°C
- Operation : -40°C ; +65°C
- Voltage regulation: ± 0.5%.
- Voltage supply/sensing range 85 to 139 V (50/60 Hz)
- Rapid response time (500 ms) for a transient voltage variation amplitude of ± 20%
- Voltage setting **P1**
- Stability setting **P2**.
- Power supply protected by 8 A fuse, slow-blow action (tolerates 10 A for 10 s)
The fuse is impregnated in the resin, therefore it can not be replaced.
- Frequency: 50 Hz with **ST3** jumper - 60 Hz without **ST3** jumper.
- The size of the screwdriver tip used to adjust the potentiometer is 2.5 mm.

2.2 - R220 AVR option

Potentiometer for remote voltage adjustment, 1000 Ω / 0.5 W min: adjustment range ± 5%.
- Remove the **ST4** jumper.

For wiring up the external potentiometer; the "earth" wires must be isolated as well as the potentiometer terminals (wires at the same voltage as the power).

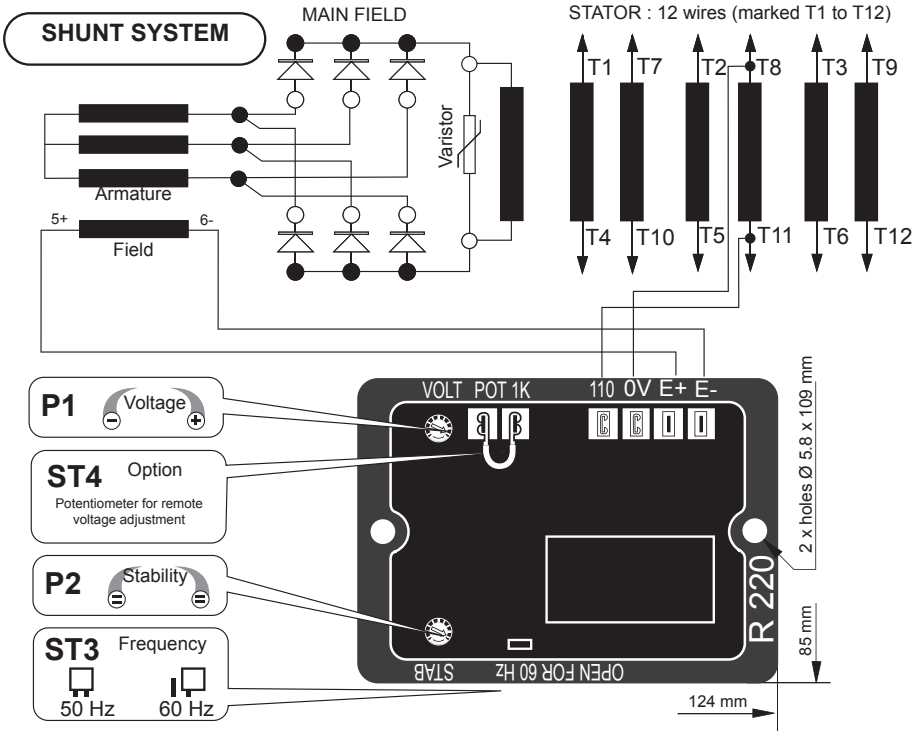

3 - INSTALLATION - COMMISSIONING

3.1 - Electrical checks on the AVR

- Check that all connections have been made properly as shown in the attached wiring diagram.

- Check that the ST3 frequency selection jumper is on the correct frequency setting.

- Check whether the ST4 jumper or the remote adjustment potentiometer have been connected.

3.2 - Settings

The machine is tested and set at the factory. When first used with no load, make sure that the drive speed is correct and stable (see the nameplate). After operational testing, replace all access panels or covers.
The only possible adjustments to the machine should be made on the AVR.

3.2.1 - R 220 setting (shunt system)

Initial potentiometer settings

- **P1** potentiometer (AVR voltage adjustment): fully anti-clockwise.

- Remote voltage adjustment potentiometer: centre position.

Run the alternator at its rated speed. If the voltage does not increase, the magnetic circuit should be remagnetized (see section 3.3).

- Turn the AVR voltage adjustment potentiometer **P1** slowly until the output voltage rated value is obtained.

- Adjust the stability setting using **P2.**
Clockwise: increase the rapidity.
Anti-clockwise: decrease the rapidity.

3.2.2 - Special type of use

WARNING

Excitation circuit E+, E- must not be left open when the machine is running : AVR damage will occur.

3.2.1.1 - R220 field weakening (SHUNT)

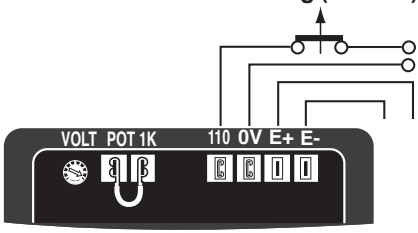

The exciter is switched off by disconnecting the AVR power supply (1 wire - 0 or 110V).
Contact rating : 16A - 250V alt.

The power supply contactor must only be closed when the alternator is not being driven

3.2.1.2 - R220 field forcing

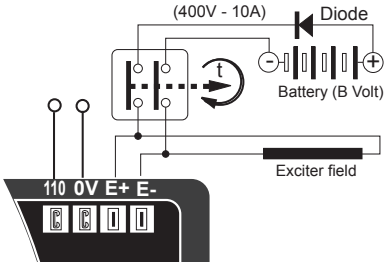

Battery must be isolated from the earth.

Exciter field may be at line potential.

3.3 - Electrical faults

Fault	Action	Effect	Check/Cause
No voltage at no load on start-up	Connect a new battery of 4 to 12 volts to terminals E- and E+, respecting the polarity, for 2 to 3 seconds	The alternator builds up and its voltage is still correct when the battery is removed.	- Lack of residual magnetism
		The alternator builds up but its voltage does not reach the rated value when the battery is removed.	- Check the connection of the voltage reference to the AVR - Faulty diodes - Armature short-circuit
		The alternator builds up but its voltage disappears when the battery is removed	- Faulty AVR - Field windings disconnected - Main field winding open circuit - check the resistance
Voltage too low	Check the drive speed	Correct speed	Check the AVR connections (AVR may be faulty) - Field windings short-circuited - Rotating diodes burnt out - Main field winding short-circuited - Check the resistance
		Speed too low	Increase the drive speed (Do not touch the AVR voltage pot. (P2) before running at the correct speed.)
Voltage too high	Adjust AVR voltage potentiometer	Adjustment ineffective	Faulty AVR
Voltage oscillations	Adjust AVR stability potentiometer		- Check the speed : possibility of cyclic irregularity - Loose connections - Faulty AVR - Speed too low when on load (or U/F bend set too high)
Voltage correct at no load and too low when on load (*)	Run at no load and check the voltage between E+ and E- on the AVR		- Check the speed (or U/F bend set too high)
			- Faulty rotating diodes - Short-circuit in the main field. Check the resistance - Faulty exciter armature.
(*) Caution : For single-phase operation, check that the sensing wires coming from the AVR are correctly connected to the operating terminals			
Voltage disappears during operation	Check the AVR, the surge suppressor, the rotating diodes, and replace any defective components	The voltage does not return to the rated value.	- Exciter winding open circuit - Faulty exciter armature - Faulty AVR - Main field open circuit or short-circuited

Warning : after operational testing, replace all access panels or covers.

4 - SPARE PARTS

4.1 - Designation

Description	Type	Code
A.V.R.	R 220	AEM 110 RE 028

4.2 - Technical support service

Our technical support service will be happy to provide any information you require.

When ordering spare parts, you should indicate the complete machine type, its serial number and the information indicated on the nameplate.

Part numbers should be identified from the exploded views and their description in the parts list.
Our extensive network of «service stations» can dispatch the necessary parts without delay.
To ensure correct operation and the safety of our alternators, we recommend the use of original manufacture spare parts.
In the event of failure to comply with this advice, the manufacturer cannot be held responsible for any damage.

LEROY®
SOMER

LEROY SOMER®

3971 en - 2010.11 / f

This manual is to be given to the end user

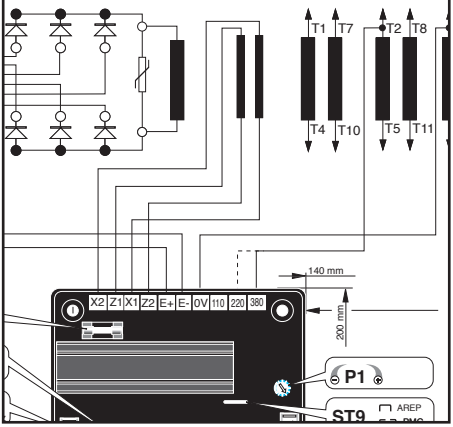

R438

A.V.R.

Installation and maintenance

227/242

R438
A.V.R.

This manual concerns the alternator A.V.R. which you have just purchased.

We wish to draw your attention to the contents of this maintenance manual. By following certain important points during installation, use and servicing of your A.V.R., you can look forward to many years of trouble-free operation.

SAFETY MEASURES

Before using your machine for the first time, it is important to read the whole of this installation and maintenance manual.

All necessary operations and interventions on this machine must be performed by a qualified technician.

Our technical support service will be pleased to provide any additional infor-mation you may require.

The various operations described in this manual are accompanied by recommen-dations or symbols to alert the user to potential risks of accidents. It is vital that you understand and take notice of the following warning symbols.

This A.V.R. can be incorporated in a machine marked C.E.

WARNING

Warning symbol for an operation capable of damaging or destroying the machine or surround-ing equipment.

Warning symbol for general danger to personnel.

Warning symbol for electrical danger to personnel.

Note: LEROY-SOMER reserves the right to modify the characteristics of its products at any time in order to incorporate the latest technological developments. The information contained in this document may therefore be changed without notice.

R438
A.V.R.

CONTENTS

1 - SUPPLY **4**
1.1 - AREP excitation system 4
1.2 - PMG excitation system 5
1.3 - SHUNT or separate excitation system 5

2 - R438 A.V.R. **6**
2.1 - Characteristics 6
2.2 - Frequency compared with voltage (without LAM) 6
2.3 - LAM (Load Acceptance Module) characteristics 6
2.4 - Typical effects of the LAM with a diesel engine with or without a LAM (U/F only) 7
2.5 - R438 A.V.R. options 7

3 - INSTALLATION - COMMISSIONING **8**
3.1 - Electrical checks on the AVR 8
3.2 - Settings 8
3.3 - Electrical faults 11

4 - SPARE PARTS **12**
4.1 - Designation 12
4.2 - Technical support service 12

All such operations performed on the A.V.R. should be undertaken by personnel trained in the commissioning, servicing and maintenance of electrical and mechanical components.

The R438 is an IP00 product. It must be installed inside a unit so that this unit's cover can provide IP20 minimum total protection (it must only be installed on LS alternators in the appropriate location so that when viewed externally, it has a higher degree of protection than IP20).

Copyright 2005 : MOTEURS LEROY-SOMER
This document is the property of :
MOTEURS LEROY-SOMER
It may not be reproduced in any form without prior authorization.
All brands and models have been registered and patents applied for.

R438
A.V.R.

1 - SUPPLY

1.1 - AREP excitation system

For both AREP & PMG excitation systems, the alternator voltage regulator is the R438. With **AREP** excitation, the R438 electronic AVR is powered by two auxiliary windings which are independent of the voltage match circuit.
The first winding has a voltage in proportion to that of the alternator (characteristic Shunt), the second has a voltage in proportion to the stator current (compound characteristic: Booster effect).
The power supply voltage is rectified and filtered before being used by the AVR monitoring transistor. This principle ensures that regulation is not affected by distortions generated by the load.

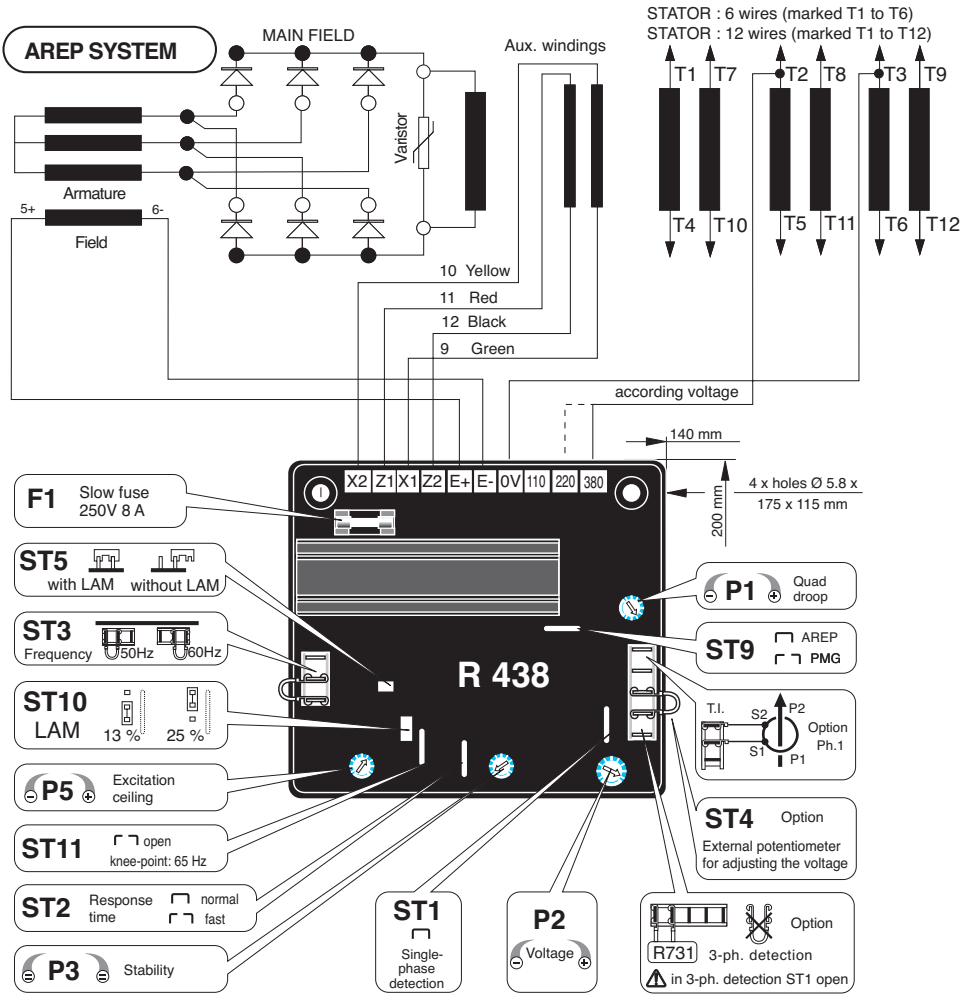

1.2 - PMG excitation system

This excitation system consists of a «**PMG**» (permanent magnet generator). This is fitted at the rear of the machine and connected to the R438 AVR.
The PMG supplies the AVR with constant voltage which is independent of the main alternator winding. As a result the machine has a short-circuit current capacity and good immunity to distortions generated by the load.
The AVR monitors and corrects the alternator output voltage by adjusting the excitation current.
- 50/60 Hz selection via the **ST3** jumper.

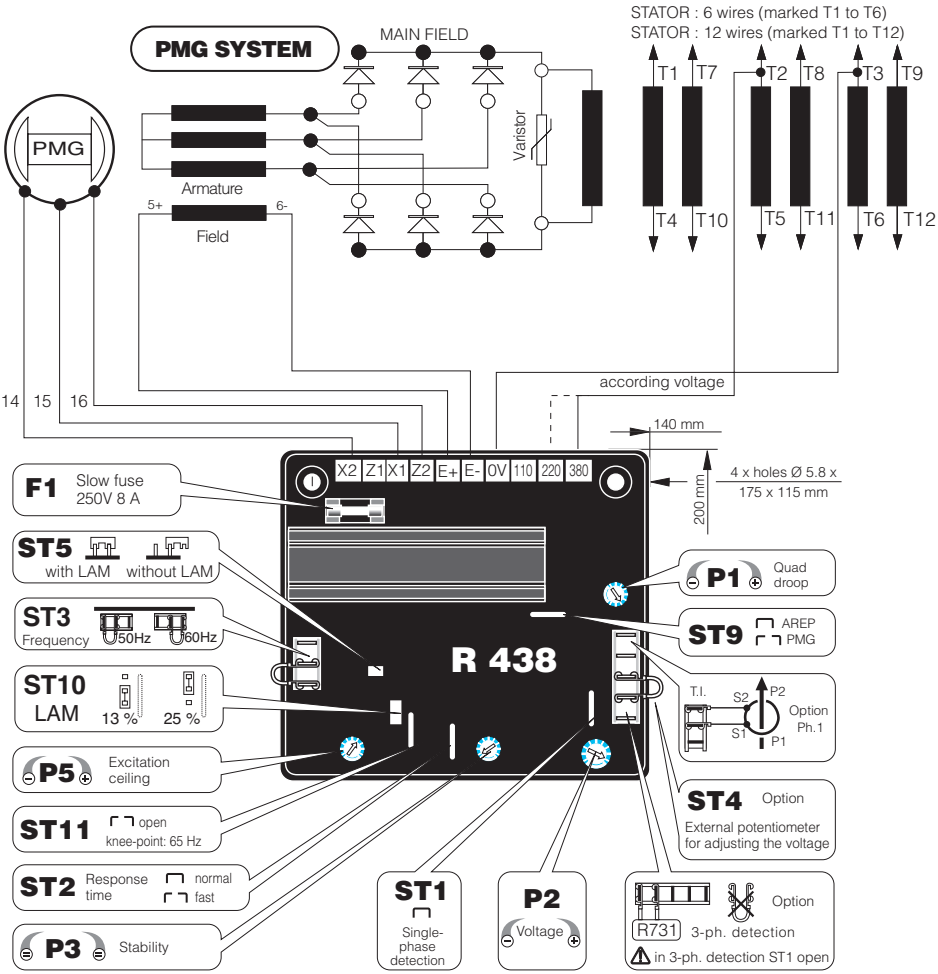

1.3 - SHUNT or separate excitation system

A.V.R. can be operated with SHUNT supply (with a transformer / secondary 50V or a 48V battery).

2 - R438 A.V.R.

2.1 - Characteristics

- Storage : -55°C ; +85°C
- Operation : -40°C ; +70°C
- Standard power supply: AREP or PMG.
- Rated overload current: 8 A - 10 s
- Electronic protection (overload, short-circuit on opening of voltage sensing circuit): excitation overload current for 10 seconds then return to approximately 1A. The alternator must be stopped (or the power switched off) in order to reset the protection.
- Fuse : F1 on X1, X2. 8A ; slow - 250V
- Voltage sensing : 5 VA isolated via transformer ;
  - 0-110 V terminals = 95 to 140 V,
  - 0-220 V terminals = 170 to 260 V,
  - 0-380 V terminals = 340 to 520 V.
- Voltage regulation ± 1%.
- Normal or rapid response time via **ST2** jumper (see below).
- Voltage adjustment via potentiometer **P2**. other voltages via adapter transformer
- Current sensing (parallel operation): C.T. 2.5 VA cl1, secondary 1 A (optional).
- Quadrature droop adjustment via potentiometer **P1**.
- Max. excitation current adjustment via **P5** (see below).

2.1.1 - Configuration jumpers function

Pot.	Delivrery config.		Position	Function
	Open	Closed		
ST1	3-ph.	Mono		Open for module installation tri detection
ST2	Fast	Normal		Response time
ST3			50 ou 60 Hz	Frequency selection
ST4	External potentio-meter	Without		Potentiometer
ST5	Without	With		LAM
ST9	Others (PMG...)	AREP		Supply
ST10			13% or 25%	LAM voltage drop amplitude
ST11	65 Hz	48 or 58 Hz		U/f function bend position

2.1.2 - Setting potentiometers function

Delivrery position	Pot.	Function
0	P1	Quadrature droop ; // operation with C.T.
400V	P2	Voltage
Centre	P3	Stability
Maxi	P5	Excitation current ceiling

2.2 - Frequency compared with voltage (without LAM)

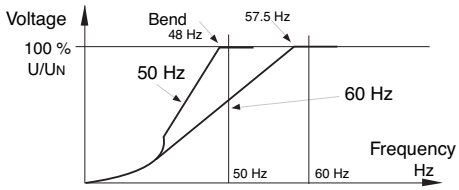

2.3 - LAM (Load Acceptance Module) characteristics

2.3.1 - Voltage drop

The LAM system is integrated in the R 438 AVR as standard.
Role of the «LAM» (Load Adjustment Module) :
On application of a load, the rotation speed of the generator set decreases. When it passes below the preset frequency threshold, the LAM causes the voltage to drop by approximately 13% or 25% and consequently the amount of active load applied is reduced by approximately 25% to 50%, until the speed reaches its rated value again.
Hence the LAM can be used either to reduce the speed variation (frequency) and its duration for a given applied load, or to increase the applied load possible for one speed variation (turbo-charged engine).
To avoid voltage oscillations, the trip threshold for the LAM function should be set approximately 2 Hz below the lowest frequency in steady state.

- LAM : action eliminated by cutting the ST5 jumper.

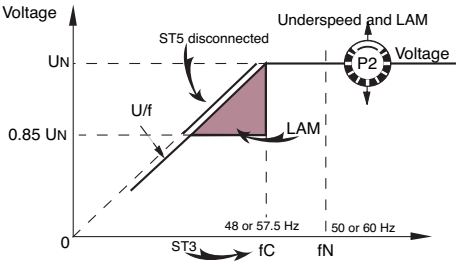

2.3.2 - Gradual voltage return function

During load impacts, the function helps the genset to return to its rated speed faster thanks to a gradual increase in voltage according to the principle:
- If the speed drops between 46 and 50 Hz, the rated voltage follows a fast gradient as it is restored.
- If the speed drops below 46 Hz, since the engine needs more help, the voltage follows a slow gradient as it returns to the reference value.

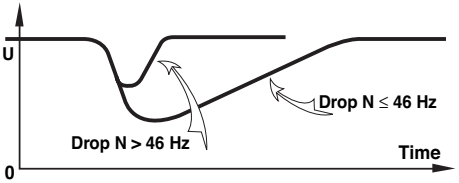

2.4 - Typical effects of the LAM with a diesel engine with or without a LAM (U/F only)

2.4.1 - Voltage

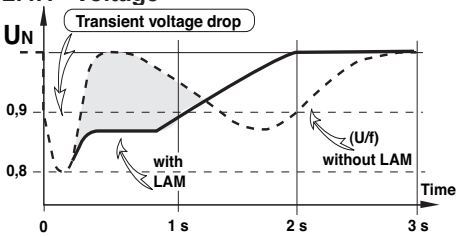

2.4.2 - Frequency

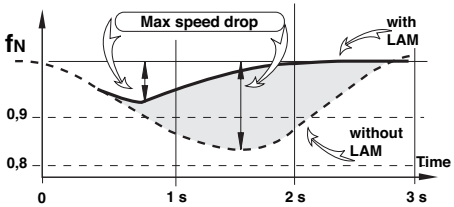

2.4.3 - Power

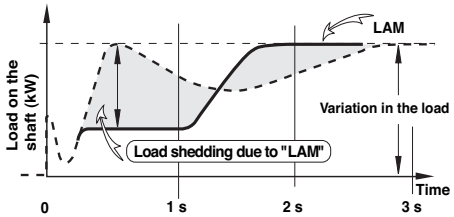

2.5 - R438 A.V.R. options

- **Current transformer** for parallel operation of ...../1A. 5 VA CL 1.

- **Remote voltage adjustment potentiometer**: 470 Ω, 0.5 W min: adjustment range ± 5% (range limited by internal voltage potentiometer **P2**). Remove ST4 to connect the poten-tiometer. (A 1 kΩ potentiometer can also be used to extend the adjustment range).

For wiring up the external potentiometer; the "earth" wires must be isolated as well as the potentiometer terminals (wires at the same voltage as the power).

- **R 731 external module**: sensing of 3-phase voltage 200 to 500 V, compatible with parallel operation. Disconnect ST1 to connect the module; set the voltage via the module potentiometer.

- R 734 module: detection of 3-phase current and voltage for parallel operation on unbalanced installations (imbalance > 15%).

- **R 726 module**: 3 functions (mounted externally).
P.F. regulation (2F) and voltage sensing circuit before paralleling (3 F).

- Control through DC voltage used monitoring apply to the terminals for connection of a potentiometer DC voltage :
• internal impedance 1,5 kΩ
• ± 0,5V enable a voltage setting of 10%.

3 - INSTALLATION - COMMISSIONING

3.1 - Electrical checks on the AVR

- Check that all connections have been made properly as shown in the attached wiring diagram.
- Check that the ST3 frequency selection jumper is on the correct frequency setting.
- Check whether the ST4 jumper or the remote adjustment potentiometer have been connected.
- Optional operating modes.
  • ST1 jumper : open to connect the R 731or R 734 3-phase sensing module.
  • ST2 jumper : open if rapid response time used
  • ST5 jumper : open to suppress the LAM function.

3.2 - Settings

The machine is tested and set at the factory. When first used with no load, make sure that the drive speed is correct and stable (see the nameplate). After operational testing, replace all access panels or covers.
The only possible adjustments to the machine should be made on the AVR.

3.2.1 - R438 settings (AREP or PMG system)

WARNING

Before any intervention on the A.V.R., make sure that the ST9 jumper is closed with AREP excitation and disconnected with PMG or SHUNT or separate excitation.

a) Initial potentiometer settings (see table below)
- Remote voltage adjustment potentiometer : centre (ST4 jumper removed).

Action	Factory setting	Pot.
Voltage minimum fully anti-clockwise	400V - 50 Hz (Input 0 - 380 V)	P2
Stability	Not set (centre position)	P3
Voltage quadrature droop (// operation with C.T.) - 0 quadrature loop fully anti-clockwise.	Not set (fully anti-clockwise)	P1
Excitation ceiling Limit of excitation and short-circuit current, minimum fully anti-clockwise.	10 A maximum	P5

Stability adjustments in standalone operation

b) Install a D.C. analogue voltmeter (needle dial) cal. 50V on terminals E+, E- and an A.C. voltmeter cal 300 - 500 or 1000V on the alternator output terminals.

c) Make sure that the **ST3** jumper is positioned on the desired frequency (50 or 60 Hz).

d) Voltage potentiometer **P2** at minimum, fully anti-clockwise.

e) Stability potentiometer **P3** to around 1/3 of the anti-clockwise limit.

f) Start the engine and set its speed to a frequency of 48 Hz for 50 Hz, or 58 for 60 Hz.

g) Set the output voltage to the desired value using **P2**.
- Rated voltage UN for solo operation (eg. 400 V)
- Or UN + 2 to 4% for parallel operation with C.T. (eg. 410 V)
If the voltage oscillates, use P3 to make adjustments (try both directions) observing the voltage between E+ and E- (approx. 10V D.C.).

The best response times are obtained at the limit of the instability. If no stable position can be obtained, try disconnecting or replacing the ST2 jumper (normal/fast).

h) Check LAM operation : **ST5** closed.

i) Vary the frequency (speed) around 48 or 58 Hz according to the operating frequency, and check the change in voltage from that observed previously (~ 15%).

j) Readjust the speed of the unit to its rated no-load value.
Adjustments in parallel operation

Before any intervention on the alternator, make sure that the speed droop is identical for all engines.

k) Preset for parallel operation (with C.T. connected to S1, S2)
- Potentiometer P1 (quadrature droop) in centre position.
Apply the rated load (cos φ = 0.8 inductive). The voltage should drop by 2 to 3%. If it increases, check that V and W and also S1 and S2 have not been reversed.

l) The no-load voltages should be identical for all the alternators intended to run in parallel.
- Couple the machines in parallel.
- By adjusting the **speed**, try to obtain **0 KW** power exchange.
- By altering the voltage setting P2 on one of the machines, try to cancel (or minimise) **the current** circulating between the machines.
- From now on, do not touch the voltage settings.

m) Apply the available load (the setting is only correct if a **reactive** load is available)
- By altering the **speed**, match the **kW** (or divide the rated power of the units proportionally)
- By altering the quadrature droop potentiometer **P1**, match or divide the **currents**.

3.2.2 - Max. excitation setting (excitation ceiling)

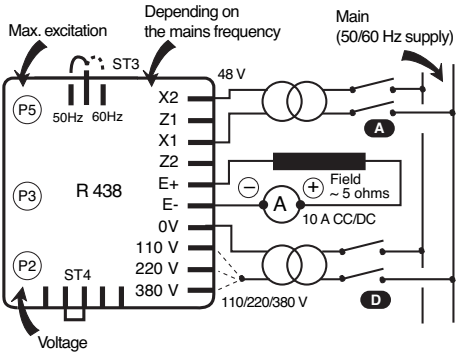

Static adjustment of the current limit, potentiometer P5 (factory setting: 7.5 A, fuse rating: 8 A - 10 seconds).

The maximum factory setting corresponds to that of the excitation current required to obtain a 3-phase short-circuit current of approximately 3 IN at 50 Hz for industrial power, unless otherwise specified(*).

A static method can be used to reduce this value or adapt the Isc to the actual operating power (derated machine), which is safer for the alternator and the installation. Disconnect power supply wires X1,X2 and Z1,Z2 and the voltage reference (0-110V-220V-380V) on the alternator.

Connect the mains power supply using a transformer (200-240V) as indicated (X1,X2 : 48V). Install a 10A D.C. ammeter in series with the exciter field. Turn P5 fully anti-clockwise and activate the power supply. If there is no output current from the AVR, turn potentiometer P2 (voltage) clockwise until the ammeter indicates a stable current. Switch the power supply off, then on again, turn P5 clockwise until the required max. current is obtained (no more than 8 A).

Checking the internal protection :
Open switch (D) : the excitation current should increase to its preset ceiling, remain at that level for ≥ 10 seconds and then drop to < 1A.
To reset, switch off the power supply by opening switch (A).
Note: After setting the excitation ceiling as described, adjust the voltage again (see section 2.1.1)
(*) In some countries it is a legal requirement to have a short-circuit current of 3 I_N, so as to offer selective protection.

3.2.3 - Special type of use

WARNING

Excitation circuit E+, E- must not be left open when the machine is running : AVR damage will occur.

3.2.3.1 - R438 field weakening (SHUNT)

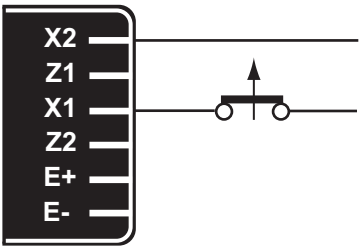

The exciter is switched off by disconnecting the AVR power supply (1 wire - X1 or X2).
Contact rating 16 A - 250V A.C.

3.2.3.2 - R438 field weakening (AREP/ PMG)

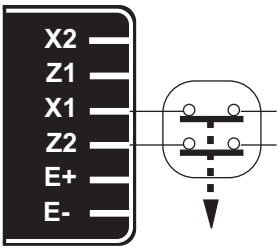

The exciter is switched off by disconnecting the AVR power supply (1 wire on each auxiliary winding) - contact rating 16 A - 250V A.C.
Connection is identical for resetting the AVR internal protection.

In case of using the de-excitation, provide a forced excitation.

3.2.3.3 - R438 field forcing

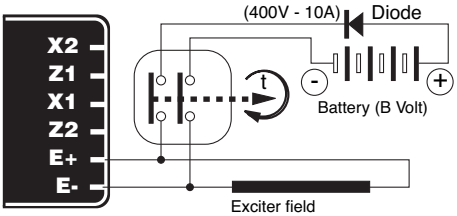

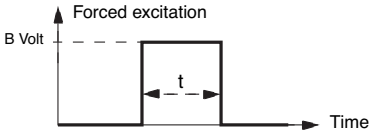

Applications	B volts	Time t
Guaranteed voltage build-up	12 (1A)	1 - 2 s
Parallel operation, de-energized	12 (1A)	1 - 2 s
Parallel operation, at standstill	12 (1A)	5 - 10 s
Frequency starting	12 (1A)	5 - 10 s
Sustained voltage on overload	12 (1A)	5 - 10 s

3.3 - Electrical faults

Fault	Action	Effect	Check/Cause
No voltage at no load on start-up	Connect a new battery of 4 to 12 volts to terminals E- and E+, respecting the polarity, for 2 to 3 seconds	The alternator builds up and its voltage is still correct when the battery is removed.	- Lack of residual magnetism
		The alternator builds up but its voltage does not reach the rated value when the battery is removed.	- Check the connection of the voltage reference to the AVR - Faulty diodes - Armature short-circuit
		The alternator builds up but its voltage disappears when the battery is removed	- Faulty AVR - Field windings disconnected - Main field winding open circuit - check the resistance
Voltage too low	Check the drive speed	Correct speed	Check the AVR connections (AVR may be faulty) - Field windings short-circuited - Rotating diodes burnt out - Main field winding short-circuited - Check the resistance
		Speed too low	Increase the drive speed (Do not touch the AVR voltage pot. (P2) before running at the correct speed.)
Voltage too high	Adjust AVR voltage potentiometer	Adjustment ineffective	Faulty AVR
Voltage oscillations	Adjust AVR stability potentiometer	If no effect : try normal / fast recovery modes (ST2)	- Check the speed : possibility of cyclic irregularity - Loose connections - Faulty AVR - Speed too low when on load (or U/F bend set too high)
Voltage correct at no load and too low when on load (*)	Run at no load and check the voltage between E+ and E- on the AVR	Voltage between E+ and E- SHUNT < 20 V AREP / PMG < 10V	- Check the speed (or U/F bend set too high)
		Voltage between E+ and E- SHUNT > 30V AREP / PMG > 15V	- Faulty rotating diodes - Short-circuit in the main field. Check the resistance - Faulty exciter armature.
(*) Caution : For single-phase operation, check that the sensing wires coming from the AVR are correctly connected to the operating terminals			
Voltage disappears during operation (**)	Check the AVR, the surge suppressor, the rotating diodes, and replace any defective components	The voltage does not return to the rated value.	- Exciter winding open circuit - Faulty exciter armature - Faulty AVR - Main field open circuit or short-circuited
(**) Caution : Internal protection may be activated (overload, open circuit, short-circuit)			

Warning : after operational testing, replace all access panels or covers.

4 - SPARE PARTS

4.1 - Designation

Description	Type	Code
A.V.R.	R 438	AEM 110 RE 017

4.2 - Technical support service

Our technical support service will be happy to provide any information you require.

When ordering spare parts, you should indicate the complete machine type, its serial number and the information indicated on the nameplate.

Part numbers should be identified from the exploded views and their description in the parts list.

Our extensive network of «service stations» can dispatch the necessary parts without delay.
To ensure correct operation and the safety of our machines, we recommend the use of original manufacture spare parts.
In the event of failure to comply with this advice, the manufacturer cannot be held responsible for any damage.

R438

NOTES

R438

NOTES

MOTEURS LEROY-SOMER 16015 ANGOULÊME CEDEX - FRANCE

338 567 258 RCS ANGOULÊME
S.A. au capital de 62 779 000 €

www.leroy-somer.com